List of paper published by Final year students for academic year: 2023-24

Dr. J. J. Magdum Trust's
Dr. J. J. Magdum College of Engineering, Jaysingpur.
Department of Information Technology
2023-24
Project Details

New Roll No	Name of the Student	Group No.	Sponserd or not	Type of project	Name of Guide	Paper Publication	Journal
1	* SUTAR SWALIHA INAYATULLA	G1 Mental IQ Level Increase		Innovative researched oriented	Prof.Ms.J.T.Patil	Mental IQ detection with ML: A review Paper	Mentech publication pvt ltd
2	* BANSODE ANJALI PRAKASH						
3	* FASE SAMRUDDHI DEVIDAS						
4	* SAVAIKAR SAMRUDDHI SHRIHARI						
5	* GAIKWAD VAIBHAVI VINOD						
6	* JAMBHALE AVANTIKA JANARDAN	G2 EcoBin SmartSort		Society	Prof.Mrs.A.S.Patil	EcoBin SmartSort: An IoT-Based Approach to Efficient Waste Sorting	International Journal of Research Publication and Reviews (IJPRR)
7	* KHEDEKAR SUDIKSHA GAJANAN						
8	* SALUNKHE SHITAL SANJAY						
9	AITAWADE PRATHMESH PRADEEP	G3 Smart attendance using flutter		Institute	Prof.Ms.A.G.Chendke	Smart attendance application using flutter	IJCRT
10	* BANDIVANA RAJU						
11	DHAVALE OM CHANDRASHEKHAR						
12	* MANE PRATIKSHA PRAVIN						
13	* PATIL SNEHA GANPATI	G4 Blockchain based Medichain system connecting Pharma medicals and patients together		Industry	Prof.Ms.P.R.Patil	Blockchain based Medichain system connecting Pharma medicals and patients together	IJRASET
14	* PATIL SAKSHI SANJAY						
15	* PATIL SAKSHI RAJENDRA						
16	PETHKAR RHUSHABH MANISH						
17	* KALE AISHWARYA SUBHASH	G5 Blinds plotter:Ultrasonic GPS Project		Innovative researched oriented	Prof.Mrs.S.B.Holkar	Blind plotter ultrasonic gps	international journal of research publications and review
18	* PUJARI SHUBHANGI RAJESH						
19	* PATIL POURNIMA PANDURANG						
20	* KHANAJ NEHA ULHAS						
21	* LAD VAISHNAVI VISHWAS	G6 Air quality reporting station using IOT		Innovative researched oriented	Prof.Mrs.S.J.Chougule	Air quality monitoring with speach announcement	IJRASET
22	* PATIL SAYALI RAJARAM						
23	* PISE GAURI ARUN						
24	PETHKAR SOURABH GIRISH						
25	BHUSNAR SANGRAMSINH KANTILAL	G7 Road damage detection		Industry	Prof.Ms.P.R.Desai	Road Damage Detection And Classification	Road Damage Detection And Classification
26	KASAR SWACCHAND SAMBHAJI						
27	* MANKAR MANALI RAJENDRA						
28	* HARGUDE SAKSHI SHARAD						
29	KAMBLE PURUSHOTTAM SANJAY						

Dr. J.J. Magdum College of Engineering, Jaysingpur. I.T. Dept

30	* PATIL PRATIKSHA CHANDRAKANT	G8 Farming management System		Society	Prof.Ms.P.A. Tamgave	Smart Farming system	International Journal of Research publication and reviews
31	* SATAPE PRATIKSHA BALASO						
32	* KADAM PREETI JALINDAR						
41	* VHANKHANDE PRAJAKTA RAMESH						
33	SHINDE VARAD SUDARSHAN	G9 Application of Internet of Things (IOT) with reference to Electricity Theft Detection		Industry	Prof.Mr.R.A.Bharatiya	Application Of Internet Of Things And Machine Learning With Reference To Electricity Theft Detection	International Journal Of Research Publication
34	POWAR SUYOG SHIVAJI						
35	DESAI SHUBHAM BHIMGONDA						
36	YEWATE GANESH GOVIND						
37	* SANT MAYURI DEVANAND	G10 Smart Parking System		Industry	Prof.Mrs.S.J.Chougule	Smart Parking	IRRR
38	* KHOT SHWETA DHANANJAY						
39	* KOLAPE YASHODA TUKARAM						
40	* CHAVAN AISHWARYA VILAS						
42	* YADAV RUCHITA BHARAT	G11 Deaf Helper		Society	Prof.Ms.P.R.Desai	Deaf Helper Using Python	International Journal for Research in Applied Science & Engineering Technology (IJRASET)
43	PARIT PRADEEP MAHADEV						
44	GURAV PRATHAMESH GANPATI						
45	YALGUDRE ANIRUDDHA PARSHURAM						
71	PATIL VRUSHAB BAJIRAO						
46	CHOUGULE ANAND DILIP	G12 Safe Communication		Industry	Prof.Ms.A.G.Chendke	SAFE COMMUNICATION USING STEGANOGRAPHY	INTERNATIONAL JOURNAL OF SCIENTIFIC RESEARCH IN ENGINEERING & MANAGEMENT (IJSREM)
47	JADHAV SHIVAM RAMCHANDRA						
48	PATIL SUBODH RAVINDRA						
49	SHAIKH AFTAB FIROJKHAN						
50	DHOKALE AJAY DHANANJAY	G13 Tourist Guide with Augmented Reality		Society	Prof.Ms.P.A. Tamgave	Tourist Guide with Augmentated Reality	International Journal for Research in Applied Science & Engineering Technology (IJRASET)
51	BIRNALE KIRTIKUMAR ASHOK						
52	* LOHAR ANURADHA MARUTI						
53	* KORE SAKSHI MOHAN						
54	MHETRE VINAYAK SADASHIV	G14 Customized Website and Café Management Application	Sponserd	Industry	Prof.Ms.P.R.Patil	Deaf Helper Using Python	IJRASET
55	PATIL ADITYA DHONDIRAM ALIAS BAL						
56	HULLE ABHIJIT PADAPPA						
57	CHOUDHARI SIDDHANT SACHIN						
58	* METHE SONAL VIJAY	G15 Enhancing Agriculture value chains through farmer-to-dealer direct product sales with Blockchain Integration		Society	Prof.Mrs.A.S.Patil	Farmer-to-Dealer Direct Product Sales with Block Chain Integration.	International Journal of Research Publication and Reviews
59	MAGDUM RUSHIKESH JAYKUMAR						
60	AINAPURE RAJKUMAR BALASAHEB						
61	KOTHARI SHREYASH NILESH						
62	MORE ABHIJEET VENKATRAO	G16 Leaf Disease Detection using flask		Society	Prof.Mrs.S.B.Holkar	LEAF DISEASE DETECTION SYSTEM USING FLASK	International Research Journal of Modernization in Engineering Technology and Science
63	MAKANDAR AJEEM ANISKHAN						
64	TODKAR VAIBHAV DEVBA						
65	PAKHARE SWAPNIL ANIL						
66	PATIL SARVESH AVINASH						
67	KUMBHAR SANKET SANJAY	G17 A digitl voting system using the blockchain technology	Sponserd	Society	Prof.Ms.J.T.Patil	Digital Voting Systems using Aadhar Authentication	International Journal for Research in Applied Science & Engineering Technology (IJRASET)
68	MOHITE SAINATH VILAS						
69	DANDAVATE BHUSHAN SADASHIV						
70	KAMBLE HRISHIKESH DEEPAK						

Dr. J.J.Magdum College of Engineering I.T. Dept

72	PINJARI OMKAR DAGADU	G18 IoT based Noise Detection and Image Capture System.		Institute	Prof.Mr.R.A.Bharatiya	Design an IoT based noise detection and alert system for silent zone areas with advanced feature	International Journal of Research Publication and Reviews
73	* DHAKANE JYOTI SUDHAKAR						
74	* INGALE ASHWINI RAMESH						
75	ABHRANGE SWAPNIL KIRAN						

Prof. Mrs. A. S. Patil
D Co-ordinator

Prof. Mr. R. A. Bharatiya
Head of Department

DRC and R&

Dr. J.J.Magdum College of Engineering • Jaysingpur •
I.T. Dept

G1

MANTECH Publications

Journal of Research in Information technology and Its Applications
Volume 8 Issue 2

Mental IQ Detection Using Machine Learning: A Review Paper

J.T.Patil[1], Swaliha Sutar[2], Anjali Bansode[3], Samruddhi Fase[4], Samruddhi Savaikar[5]

Assistant Professor[1], Student[2,3,4,5]

Department of Information Technology

Dr. J. J. Magdum College of Engineering

Corresponding Author's Email:- jtpatil1010@gmail.com[1], swaliha.sutar@gmail.com[2], anjubansode2727@gmail.com[3], fasesamruddhi28@gmail.com[4], samruddhisavaikar@gmail.com[5]

Abstract

A Mental IQ Detection using the ML technology is software based application which is designed to detect the mental IQ with their age.[1]Machine Learning is that develops algorithms by learning the hidden patterns of the datasets used it to make predictions on new similar type data. We are using Machine learning for the mental IQ detection because we can improve accuracy of the software application, it has large amount of data Making predictions about future event ML has wide range of libraries and algorithm that are available.[2]We will be using KNN Algorithm, Logistic Algorithm, Linear Algorithm, etc. IQ test continue to be one of most reliable tools to measure intelligence skills of the human. The Intelligence Quotient (IQ) tests and the corresponding psychometric explanations dominate both the scientific and popular views about human intelligence. It starts with getting information from registration form using java on android studio, where each user will have to give test series provided by the developer.[3] After user gives test series, that's where ML comes in where we need to process the date using different libraries and algorithms to detect the Mental IQ of the user with their age, ensuring transparency and security of each user.

Keywords- mental IQ detection, cognitive evaluation, mental health

INTRODUCTION

IQ measures intelligence based on a person's ability to reason using logic. Intelligence testing asks participants questions that tests their memory, pattern recognition, and problem-solving

Certificate No. MJ/5015/2023

MANTECH PUBLICATIONS

Certificate of Publication

This is to certify that the manuscript entitled "*Mental IQ Detection Using Machine Learning: A Review Paper*" submitted by "*J.T.Patil, Swaliha Sutar, Anjali Bansode, Samruddhi Fase & Samruddhi Savaikar*" has been published in "*Journal of Research in Information technology and its Applications*"

Volume 8 Issue 2 Year 2023

Dated: 21th November 2023

Dr. J.J.Magdum College of Engineering • Jaysingpur • I.T. Dept

Authorized Signatory

MANTECH Publications

MANTECH PUBLICATIONS
203, Plot No 15, Gr. Floor, Sector-2,
Vashi Navi Mumbai
Maharashtra, 400703, India

International Journal for Research in Applied Science & Engineering Technology (IJ
ISSN: 2321-9653; IC Value: 45.98; SJ Impact Fac
Volume 11 Issue XI Nov 2023- Available at www.ij

Deaf Helper Using Python

Mr. Vaishab Patil[1], Mr. Pradeep Patil[2], Miss. Rachita Yadav[3], Mr. Aniruddha Yalgudre[4], Mr. Prathamesh Gurav[5], P. R. Desai[6]
Information Technology, Shivaji University, Kolhapur

Abstract: The Deaf helper using machine learning project represents a pivotal endeavor aimed at bridging communication gaps and enhancing accessibility for the deaf and hard of hearing community. In a world where spoken language dominates, this project harnesses the power of machine learning to facilitate seamless communication for individuals who rely on sign language as their primary mode of expression. At its core, this project leverages state-of-the-art machine learning techniques, including computer vision and natural language processing, to recognize and translate sign language gestures into written or spoken language and vice versa. By fusing these technologies, the project endeavors to create an inclusive and accessible communication tool.

Keywords: Deaf Helper, Machine learning, CNN, Project, Communication.

I. INTRODUCTION

Sign language is the mode of communication which uses visual ways like expressions, hand gestures, and body movements to convey meaning. Sign language is extremely helpful for people who face difficulty with hearing or speaking. Sign language is a language in its own right. The conversion of these gestures into words or alphabets of existing formally spoken languages is called as sign language translation. The conversion of sign language into words by an algorithm or a model can help bridge the gap between people with hearing or speech impairment and the rest of the world.

- *Who are the Sign Language?*
- Deaf People
- Sign language newscasters
- Some parents also teach their babies sign language to enhance their communication skills.

- *Why is Sign Language Important?*
- Sign Language plays the major role in developing Deaf identity.
- It is the mother tongue Language.
- Use Sign language in education

Provides a chance to the deaf children to educate themselves, Enhances the level of confidence among the disabled, Instils a feeling of social responsibility and sensitivity among the non-deaf who volunteer to learn sign language in order to communicate with the disabled. Makes life easier for the deaf.

Some of the benefits of learning the sign language and its usage are as follows:

a) Helps the deaf and the dumb to communicate with the others as well as amongst themselve
b) It helps in the process of social inclusion of those that suffer from hearing impairment.
c) Provides a chance to the deaf children to educate themselves.
d) Enhances the level of confidence among the disabled
e) Instils a feeling of social responsibility and sensitivity among the non-deaf

II. RELEVANCE OF WORK

The existing systems have been able to recognize gestures with high latency as it uses only image processing. Identification of sign gesture is mainly performed by the following methods:

1) Glove-based method in which the signer has to wear a hardware glove, while the hand movements are getting captured
2) Vision-based method further classified into static and dynamic recognition. Static deals with the detection of static gestures. Challenges while dynamic is a real-time live capture of the gestures. This involves the use of the camera for capturing movements.

The Glove-based method, seems a bit uncomfortable for practical use, despite having an accuracy.

IJRASET

International Journal for Research in Applied Science & Engineering Technology

IJRASET is indexed with Crossref for DOI-DOI : 10.22214

Website : www.ijraset.com, E-mail : ijraset@gmail.com

Certificate

It is here by certified that the paper ID : IJRASET56432, entitled

Deaf Helper Using Python

by

Mr. Vrushab Patil

after review is found suitable and has been published in
Volume 11, Issue XI, November 2023
in

International Journal for Research in Applied Science & Engineering Technology
(International Peer Reviewed and Refereed Journal)

ISRA Journal Impact Factor: 7.429

45.98 INDEX COPERNICUS

THOMSON REUTERS

crossref

TOGETHER WE REACH THE GOAL
SJIF 7.429

International Journal of Research Publication and Reviews

Journal homepage: www.ijrpr.com ISSN 2582-7421

Café Crafter: The Ultimate Cafe Management System

Vinayak Mhetre, Aditya Patil, Abhijit Halle, Siddhant Choudhari, Prof. P. R. Patil

B.Tech Information Technology, Dr. J. J. Magdum College of Engineering, Jaysingpur

ABSTRACT:

The complete eatery system known as Café Crafter will assist cafe managers in handling daytime day operations like ordering, reservations, and other tasks. The complete system is made up of online and offline services. The offline service enables the cafe to handle everyday operations like ordering and seat administration as well as managing the information about the café. Additionally, the café will be able to manage its meal menu online. Once the upgrade is complete, the website will instantly display the new meal menu, seat reservations, and promotions.

HTML, CSS, JavaScript, and Microsoft SQL Express are used in the system's development as the database. It enables developers to work in a user-friendly environment and supports the most recent version of the.net framework. The most dependable and adaptable database is SQL Server, which also lets you define data processes.

The existing café operates entirely manually, which means that documentation must be completed by hand. This requires a significant amount of labor and time to maintain the records and daily operations, and human error is inevitable given the heavy burden. The Café Management System will replace their manual daily tasks with automated ones, such as order entry, reservation making, and payment processing. It will also include additional features like online meal ordering, promotion viewing, report generation, and reservation alerts.

Café Crafter: The Complete Café Administration Solution It will boost the café's productivity and enhance its offerings. In the long run, that system method will cut back on daily labor and save money and time.

Keywords: Table booking or reservations, working on eatery deals

Introduction:

Technology has revolutionized the cafe sector, especially with regard to point-of-sale procedures. When e-menus are used instead of traditional paper menus, customers may now interact with menu items and drinks in greater detail, which has completely changed the way people utilize menus. This has made ordering easier and more accessible, which has enhanced the process.

E-menus offer advantages that go beyond simply streamlining the ordering process. Cafés may now interact with patrons in real time and establish their online reputation. With the advent of digital tablets and touch screen technologies, menus have changed from plain printouts and chalkboards to intricate and vibrant displays. Because orders can be precisely taken the first time, servers won't have to go back and forth to a faraway terminal.

Orders can also be linked to specific table seats with e-menus, increasing precision and lowering mistakes. Order changes are simple to make, and a real-time cost calculation is available. Depending on personal preferences, a variety of filters can be applied, including price, taste, and quantity.

In conclusion, e-menus have revolutionized the café sector by giving patrons access to more comprehensive information and streamlining the ordering procedure. They have also made it possible for cafes to interact with patrons in real time and establish an online reputation.

MOTIVATION

1. Enables the methodical recording of time
2. Permits billing for various tasks
3. Enables computation automation
4. Permits the administrator to add, cancel, and remove records
5. An intuitive and uncomplicated user interface

International Journal for Research in Applied Science & Engineering Technology
ISSN: 2321-9653; IC Value: 45.98; SJ Impact Factor
Volume 11 Issue XI Nov 2023- Available at www.ijraset.com

Tourist Guide with Augmented Reality

Prof. U. A. Gangave[1], Mr. Ajay Dhokale[2], Mr. Kirtikumar Birnale[3], Ms. Anuradha Lohar[4], Ms. Saksha Kore[5]
Dept of Information Technology, Dr. J. J. Magdum College of Engineering

Abstract: This study aims to examine the use of the application in tourism field on the question of what augmented reality applications mean, which is one of the endpoints of technology for tourism. With the study of in-depth literature, first, augmented reality has been determined, and the changes and developments it has undergone throughout the history have been examined. Then, its areas of use and the types have been examined. Today, it is thought that the augmented reality, being the newest dimension of technology and seems it is almost impossible not to use in the area of tourism will provide a huge amount of marketing convenience and competitive advantages. In this article, twelve case studies on the application used in many fields of tourism such as transportation, accommodation, food & beverage and museums, have been analysed.
Keywords: Tourism; Tourist; Augmented reality.

I. INTRODUCTION

Augmented Reality is a complex field utilizing information technologies in diverse areas such as medicine, education, architecture, industry, tourism and others by augmenting the real-time real-world view with additional superimposed information in chosen formats. The aim of this paper is to present an overview of application aspects of using augmented reality technologies in tourism domain technology. This technology is revolutionizing the traveler's experience by making the journey more seamless, interactive, and simple. Thus, enhancing the tourist experience throughout the process. Augmented reality is an interactive experience of a real-world environment where the objects that reside in the real world are enhanced. The use of augmented reality technology within the travel industry is still a relatively recent development and, as a result, new uses are emerging all the time.

Augmented Reality focuses in enhancing physically-based reality perception through computer-generated sensory output. Augmented Reality: Is a visualization technique that superimposes computer generated data, such as text, video, graphics, GPS data and other multimedia formats, on top of the real- world view, as captured from the camera of a computer, a mobile phone or other devices. In an age where technology continues to reshape our world, augmented reality (AR) has emerged as a game-changer in the tourism industry. Augmented reality, a blend of digital information and the real world, is transforming the way we explore and experience new destinations. This innovative technology has opened up a realm of possibilities for tourists, enhancing their interactions with the places they visit. In this 21st-century tourist guide, we will delve into the fascinating world of augmented reality, exploring how it is revolutionizing the way we travel, discover, and immerse ourselves in diverse cultures and landscapes.

Augmented reality enriches the traditional travel experience by overlaying digital content onto the physical environment. It empowers tourists with information, context, and interactivity, thus bridging the gap between the unfamiliar and the known. Imagine strolling through a historic city, and through your AR-equipped smartphone or smart glasses, you instantly receive historical facts, restaurant recommendations, and even translations for local signs and menus. Augmented reality empowers tourists to be more informed and connected to their surroundings, creating a deeper and more meaningful travel experience.

II. RELEVANCE OF WORK

Augmented Reality (AR) tourist guides have gained significant relevance in the tourism industry due to their ability to enhance the overall travel experience for tourists. Here are some key points highlighting the relevance of AR tourist guides:

1) *Enhanced Engagement:* AR tourist guides provide an interactive and immersive way for tourists to engage with their surroundings. By overlaying digital information on the real world, tourists can access historical facts, cultural insights, and other relevant information, making their visit more engaging and memorable.
2) *Personalized Experiences:* AR tourist guides can be tailored to individual preferences, allowing tourists to explore destinations based on their interests. Whether it's history, art, cuisine, or adventure, AR can provide customized recommendations and content.
3) *Real-time Information:* AR tourist guides can offer real-time updates and information about local events, weather conditions, traffic, and emergency alerts. This real-time data ensures that tourists have the most up-to-date information to plan their activities.

ISSN No : 2321-9653

IJRASET

International Journal for Research in Applied Science & Engineering Technology

IJRASET is indexed with Crossref for DOI-DOI : 10.22214

Website : www.ijraset.com, E-mail : ijraset@gmail.com

Certificate

It is here by certified that the paper ID : IJRASET56497, entitled

Tourist Guide with Augmented Reality

by

Ajay Dhokale

after review is found suitable and has been published in
Volume 11, Issue XI, November 2023
in

International Journal for Research in Applied Science & Engineering Technology
(International Peer Reviewed and Refereed Journal)
Good luck for your future endeavors

Editor in Chief, IJRASET

ISRA Journal Impact Factor: 7.429

45.98
INDEX COPERNICUS

THOMSON REUTERS

crossref

TOGETHER WE REACH THE GOAL
SJIF 7.421

(Department of Electronics & Telecommunication)

Categorization of Projects-2023-24.

Sr. No	Title of the project	Type of the project	Mapping with POs & PSOs	Remark
1	Customized amenity management access control and space optimization	Techno social Project	PO 1-6, ,PO 9,PO11,PO12,PSO1,2	Paper published ,participated in project competition
2	IOT based system for coal miners safety and Health monitoring	Techno social Project	PO 1-6, ,PO 9,PO11,PO12,PSO1,2	Paper published ,participated in project competition
3	The Ultimate Floor Cleaning Robot	Techno social Project	PO 1-6,PO 7 ,PO 9,PO11,PO12,PSO1,2	Paper published ,participated in project competition
4	Automatic college Bell using Microcontroller	Techno social Project	PO 1-6, ,PO 9,PO11,PO12,PSO1,2	Paper published ,participated in project competition
5	River cleaning machine	Socially use	PO 1-6, PO 7 ,PO 9,PO11,PO12,PSO1,2	Paper published ,participated in project competition
6	Women's Safety Jacket Using Raspberry PI.	Innovative	PO 1-6, ,PO 9,PO11,PO12,PSO1,2	Paper published ,participated in project competition
7	Design and Operation of Agriculture Based Pesticide Spraying and Grass Cutting Robot	Innovative	PO 1-6, PO 7, PO 9,PO11,PO12,PSO1,2	Paper published ,participated in project competition
8	IOT based smart door lock system	Techno social Project	PO 1-6, ,PO 9,PO11,PO12,PSO1,2	Paper published ,participated in project competition
9	Smart blind stick Arduino with GPS tracking system using GSM	Techno social Project	PO 1-6, ,PO 9,PO11,PO12,PSO1,2	Paper published ,participated in project competition
10	Automatic Gate Control System	Techno social Project	PO 1-6, ,PO 9,PO11,PO12,PSO1,2	Paper published ,participated in project competition
11	Lumpy Skin Disease Detection Device	Innovative	PO 1-6, ,PO	Paper published ,participated in

IJIREEICE ISSN (O) 2321-2004, ISSN (P) 2321-5526

International Journal of Innovative Research in Electrical, Electronics, Instrumentation and Control Engineering

Impact Factor 8.021 :: Peer-reviewed & Refereed journal :: Vol. 12, Issue 2, February 2024

DOI: 10.17148/IJIREEICE.2024.12218

"Customized Amenity Management Access Control And Space Optimization"

Prof. T. H. Mohite[1], Shruti Annasaheb Chivate[2], Harshvardhan Prakash Patil[3], Sanika Anil Patil[4]

Dept. of Electronics & Telecommunications, Dr. J. J. Magdum College of Engineering, Jaysingpur, India[1-4]

Abstract: In this paper the aim of this project is to save electricity. As we know the electricity electricity plays very important role in our daily life. Electricity is as important as food and water to people in the 21st century. However, with the growing human population and the need of electricity in our lives. As we see in the various places like school and colleges there is huge amount of electricity is wastage. Sometimes in the classroom there is light, fans, projector etc equipment's are turned on continuously and students are also forget or ignored to switch off these equipment's. This problem should be considered as serious and technology should be implemented to reduce the electricity. IOT technology which has the ability to track and control the entire process. In this project the light is automatically turned off when no one is in the classroom. So from this technique more electricity is saved.

Keywords: Arduino Uno, LCD Display , IR Sensor , RFID Card etc.

I. INTRODUCTION

The must objective of this paper is to develop a system to save the electricity. This project is based on RFID Card. The cards are provided by their priorities. High priority and low priority. Higher priority consist of professors, lecturers, principle and other higher faculty. Lower priority consist of Students. Main purpose of this project is to save electricity and make cost efficient. Whenever the lower priority (students) RFID card is swiped the only limited equipment's will be accessed . limited equipment's means the light and fan and rest of equipment's will be denied. After swiping the card it will access the particular equipment's and then IR sensor will detect the entrance of students and monitor there attendance. If higher priority will swipe the card then each and every equipment will be accessed like fan, lights, AC, projector, fridge. And when will exit the room automatically all equipment's will turn off. Using this technique we will save electricity by accessing there priorities.

II. METHDOLOGY

A. *Hardware:*

I. *Block diagram:*

In this paper a simple RFID card will detect the card and provide access from the priority, and the IR sensor count the persons which is enter from the door in the classroom and when all will exit the room the gets zero then all amenities which is present in the class will turn off automatically.

- level 1 (highest authority): users with level 1 access enjoy full control over all room amenities, including lights, air conditioning, projector, fridge, and more.
- level 2: individuals at this level have access to controlling lights and fans, ensuring basic comfort and energy efficiency.

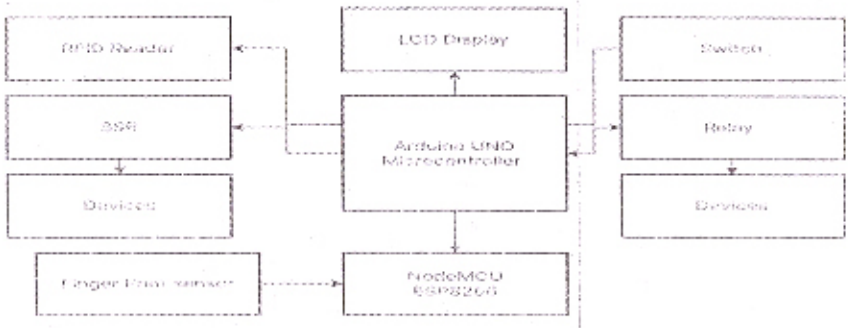

Fig. I. Block diagram

IJIREEICE ISSN (O) 2321-2004 ISSN (P) 2321-5526

International Journal of Innovative Research in Electrical, Electronics, Instrumentation and Control Engineering

Impact Factor 8.021 :: Peer-reviewed & Refereed journal :: Vol. 12, Issue 2, February 2024

DOI: 10.17148/IJIREEICE.2024.12218

I.**Arduino:** Arduino is an open-source electronics platform based on easy-to-use hardware and software. Arduino boards are able to read inputs - light on a sensor, a finger on a button, or a Twitter message - and turn it into an output - activating a motor, turning on an LED, publishing something online.

II. **Relay:** Relays are the switches that aim at closing and opening the circuits electronically as well as electromechanically. It controls the opening and closing of the circuit contacts of an electronic circuit. When the relay contact is open (NO), the relay isn't energized with the open contact.

III.**RFID card:** The full form of RFID is Radio Frequency Identification. It is an automated method of identification that utilizes non-contact wireless radio frequency signals wherein information is digitally embedded in RFID tags or smart labels which can be interpreted by radio signals by the reader.

IV:**Card Reader:** The RFID reader is a network-connected device that can be portable or permanently attached. It uses radio waves to transmit signals that activate the tag. Once activated, the tag sends a wave back to the antenna, where it is translated into data. The transponder is in the RFID tag itself.

V. **LCD display:** The liquid crystal display (LCD) panel is designed to project on-screen information of a microcomputer onto a larger screen with the aid of a standard overhead projector, so that large audiences may view on-screen information without having to crowd around the TV monitor.

B. *Software:*

I. *Flowchart:*

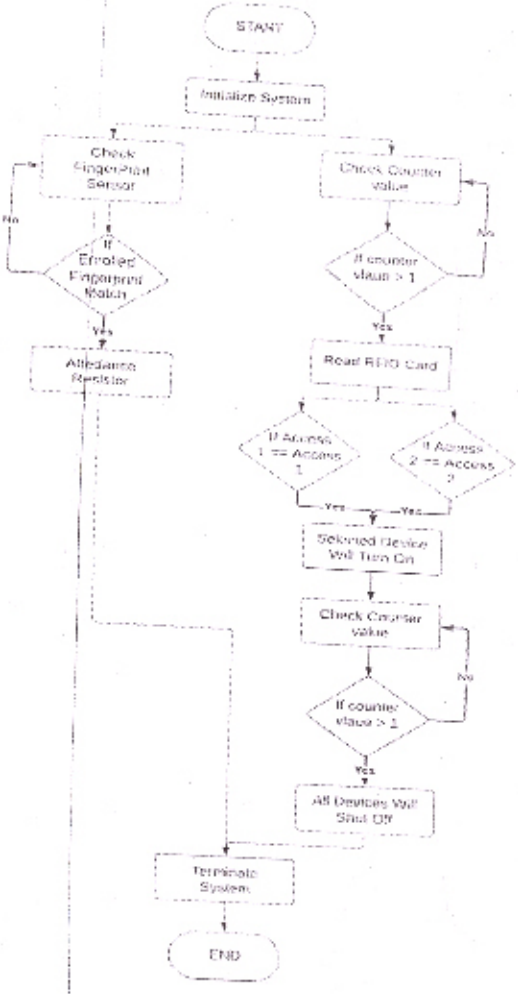

Fig. II. Flowchart of proposed system

IJIREEICE

INTERNATIONAL JOURNAL OF INNOVATIVE RESEARCH IN
ELECTRICAL, ELECTRONICS, INSTRUMENTATION AND CONTROL ENGINEERING

A monthly Peer-reviewed & Refereed journal

Impact Factor 8.021

Indexed by Google Scholar, Crossref, Mendeley, Scilit,

UGC approved in year 2017, DORA, SCIENCEOPEN, KOAR

Google Scholar Crossref MENDELEY PlumX Metrics

CERTIFICATE OF PUBLICATION

PROF. T. H. MOHITE

Dept. of Electronics & Telecommunications, Dr. J. J. Magdum College of Engineering,

Jaysingpur, India

Published a paper entitled

"Customized Amenity Management Access

Control And Space Optimization"

Volume 12, Issue 2, February 2024

DOI: 10.17148/IJIREEICE.2024.12218

Certificate#:IJIREEICE/2024/1

ISSN (Online) 2321–2004
ISSN (Print) 2321–5526

Tejass Publishéérs
Organization

Editor-in-Chief
IJIREEICE

www.ijireeice.com

SERTIFIKAAT 証明書 Sertifikat CERTYFIKAT CERTIFICADO 증명서 СЕРТИФИКАТ 证书 POTVRDA SERTIFIKA

IJIREEICE

INTERNATIONAL JOURNAL OF INNOVATIVE RESEARCH IN
ELECTRICAL, ELECTRONICS, INSTRUMENTATION AND CONTROL ENGINEERING

A monthly Peer-reviewed & Refereed journal

Impact Factor 8.021

Indexed by Google Scholar, Crossref, Mendeley, Scilit,

UGC approved in year 2017, DORA, SCIENCEOPEN, KOAR

Google Scholar Crossref MENDELEY PlumX Metrics

CERTIFICATE OF PUBLICATION

SHRUTI ANNASAHEB CHIVATE

Dept. of Electronics & Telecommunications, Dr. J. J. Magdum College of Engineering,
Jaysingpur, India

Published a paper entitled

"Customized Amenity Management Access Control And Space Optimization"

Volume 12, Issue 2, February 2024

DOI: 10.17148/IJIREEICE.2024.12218

Certificate#:IJIREEICE/2024/1

ISSN (Online) 2321–2004
ISSN (Print) 2321–5526

Tejass Publishéérs
Organization

Editor-in-Chief
IJIREEICE

www.ijireeice.com

SERTIFIKAAT 証明書 Sertifikat CERTYFIKAT CERTIFICADO 증명서 СЕРТИФИКАТ 证书 POTVRDA SERTIFIKA

IJIREEICE

INTERNATIONAL JOURNAL OF INNOVATIVE RESEARCH IN
ELECTRICAL, ELECTRONICS, INSTRUMENTATION AND CONTROL ENGINEERING

A monthly Peer-reviewed & Refereed journal

Impact Factor 8.021

Indexed by Google Scholar, Crossref, Mendeley, Scilit,

UGC approved in year 2017, DORA, SCIENCEOPEN, KOAR

Google Scholar Crossref MENDELEY PlumX Metrics

CERTIFICATE OF PUBLICATION

HARSHVARDHAN PRAKASH PATIL

Dept. of Electronics & Telecommunications, Dr. J. J. Magdum College of Engineering,
Jaysingpur, India

Published a paper entitled

"Customized Amenity Management Access Control And Space Optimization"

Volume 12, Issue 2, February 2024

DOI: 10.17148/IJIREEICE.2024.12218

Certificate#:IJIREEICE/2024/1

ISSN (Online) 2321–2004
ISSN (Print) 2321–5526

Tejass Publishéérs
Organization

Editor-in-Chief
IJIREEICE

www.ijireeice.com

SERTIFIKAAT 証明書 شهادة Sertifikat CERTYFIKAT CERTIFICADO 증명서 СЕРТИФИКАТ 証书 POTVRDA SERTIFIKA

IJIREEICE

INTERNATIONAL JOURNAL OF INNOVATIVE RESEARCH IN
ELECTRICAL, ELECTRONICS, INSTRUMENTATION AND CONTROL ENGINEERING

A monthly Peer-reviewed & Refereed journal

Impact Factor 8.021

Indexed by Google Scholar, Crossref, Mendeley, Scilit,

UGC approved in year 2017, DORA, SCIENCEOPEN, KOAR

Google Scholar Crossref MENDELEY PlumX Metrics

CERTIFICATE OF PUBLICATION

SANIKA ANIL PATIL

Dept. of Electronics & Telecommunications, Dr. J. J. Magdum College of Engineering,
Jaysingpur, India

Published a paper entitled

"Customized Amenity Management Access Control And Space Optimization"

Volume 12, Issue 2, February 2024

DOI: 10.17148/IJIREEICE.2024.12218

Certificate#:IJIREEICE/2024/1

ISSN (Online) 2321–2004
ISSN (Print) 2321–5526

Tejass Publishéérs
Organization

Editor-in-Chief
IJIREEICE

SERTIFIKAAT 証明書 شهادة Sertifikat CERTYFIKAT CERTIFICADO 증명서 СЕРТИФИКАТ 证书 POTVRDA SERTIFIKA

www.ijireeice.com

IJIREEICE ISSN (O) 2321-2004, ISSN (P) 2321-5526

International Journal of Innovative Research in Electrical, Electronics, Instrumentation and Control Engineering

Impact Factor 8.021 :: Peer-reviewed & Refereed journal :: Vol. 12, Issue 4, April 2024

DOI: 10.17148/IJIREEICE.2024.12407

"IOT based system for coal miners safety and health Monitoring"

Prof. T. H. Mohite[1], Nikhil Amit Shendage[2], Mansing Malharrao Shinde[3], Prathamesh Madhukar Killedar[4]

Dept. of Electronics & Telecommunications, Dr. J. J. Magdum College of Engineering, Jaysingpur, India[1-4]

Abstract: A smart helmet has been developed that is able to detect of hazardous events in the mines industry. In the development of helmet, we have considered the three main types of hazards such as air quality, helmet removal, and collision. The first is the concentration level of the hazardous gases such as CO, SO2, NO2, and particulate matter. The second hazardous event was classified as a miner removing the mining helmet off their head. IR sensor was then used to successfully determine when the helmet is on the miner's head. The third hazardous event is defined as an event where miners are struck by an object against the head with a force. An accelerometer was used to measure the acceleration of the head and the HIC was calculated in software. Tests were successfully done to calibrate the accelerometer. The experimental prototype consists of three sensors namely gas, infra-red and proximity sensor for their usage and the sensor data are monitored in pc via Node MCU transceiver unit.

Keywords: Arduino Uno, DTH Sensor, Gas Sensor etc.

I. INTRODUCTION

Accidents can happen in any line of work for various reasons, including carelessness or unfortunate circumstances. In the mining industry, the consequences of accidents can be extremely high, leading to loss of life, property damage, and disruption. Alerting miners in underground mines is challenging due to the dark and noisy working conditions. Traditional warning systems such as alarms, speakers, vibrations, or LED devices may not be effective as miners might not be able to hear or notice them.

Human error is a significant factor in mining incidents, and preventing such errors can greatly improve workplace safety. Miners face numerous hazards, including inadequate ventilation, flooding, explosions, collapses, haulage accidents, inrushes, inundations, spontaneous combustion, and insufficient evacuation routes. Unfortunately, there is no foolproof solution to predict and prevent these hazards before they occur.

To address these challenges, a wearable device with integrated sensors can be developed. This device would monitor a worker's physical health and the surrounding conditions, providing real-time data to managers for continuous monitoring and supervision. Additionally, an internet-based application can be created to allow administrators to access and analyze the collected data for better decision-making and proactive safety measures.

II. METHDOLOGY

1. *Block diagram:*

The Arduino Integrated Development atmosphere - or Arduino computer code (IDE) - contains a text editor for writing code, a message space, a text console, a toolbar with buttons for common functions and a series of menus. It connects to the Arduino and Genuino hardware to transfer programs and communicate with them. Programs written victimization Arduino computer code (IDE) area unit area unit. These sketches area unit written within the text editor and area unit saved with the file extension .ino.

The editor has options for cutting/pasting and for searching/replacing text. The message space provides feedback whereas saving and commerce and conjointly displays errors. The console displays text output by the Arduino computer code (IDE), including complete error messages and other information. The bottom righthand corner of the window displays the configured board and serial port. The toolbar buttons allow you to verify and upload programs, create, open, and save sketches, and open the serial monitor.

IJIREEICE ISSN (O) 2321-2004, ISSN (P) 2321-5526

International Journal of Innovative Research in Electrical, Electronics, Instrumentation and Control Engineering

Impact Factor 8.021 ∺ Peer-reviewed & Refereed journal ∺ Vol. 12, Issue 4, April 2024

DOI: 10.17148/IJIREEICE.2024.12407

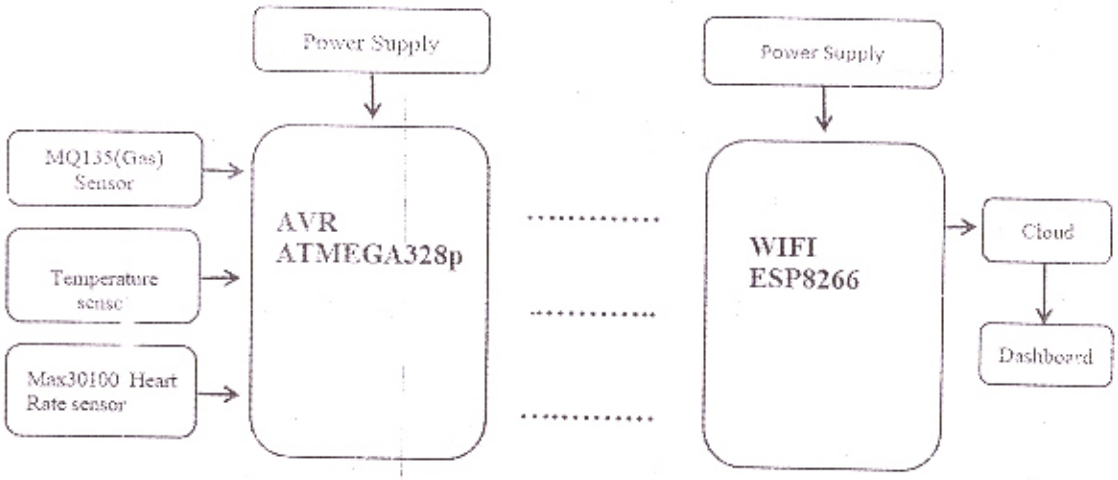

Fig. I. System Block diagram

The process begins with the collection of data by sensors, which captures information about the environment and worker conditions. This data is then transmitted to a development kit comprising an ESP8266 microcontroller, a IOT module for long-range wireless communication, and an LCD display. Utilizing the ESP8266 and AVR module, the development kit sends the collected data to a distant receiver node. The receiver kit, consisting of an ESP8266, AVR module, and lcd display, receives the transmitted data and forwards it to the cloud for further processing and analysis.Incorporating an alert system, the cloud integrates the received data and presents it on a dashboard for visualization. If any sensor value surpasses a predetermined threshold, the alert system generates an alert message on the dashboard, serving as an indication of potential issues or hazards. Additionally, to ensure timely notifications, the alert system sends messages and emails to relevant stakeholders such as supervisors or safety personnel. This feature enables swift communication, allowing prompt actions to be taken in response to critical sensor readings. Overall, the methodology combines data collection, wireless transmission, cloud integration, dashboard visualization, and alert notifications to enhance safety and facilitate efficient monitoring in the coal mine environment.

III. CONCLUSION

The implementation of a mine safety system is a complex process that requires the utilization of various sensors. The primary objective of the system is to improve the protection of workers in coal mines by preventing potential hazards and ensuring their safety. To accomplish this objective, the system employs IoT technology to constantly monitor the mine. The sensors installed in the system transmit crucial information about the mine's environmental conditions to a centralized monitoring system that deploys advanced algorithms and analytics to analyze the data in real-time. This sophisticated system ensures that any anomalies or irregularities in the mine's environment are detected immediately, and workers are alerted instantly to take appropriate measures. The system also provides valuable insights into the conditions of the mine, enabling mine operators to take proactive measures to eliminate potential hazards and improve worker safety. With this system in place, the risk of accidents and injuries in the mine can be greatly minimized, and workers can work in a secure and safe environment.

REFERENCES

[1]. Smart helmet for coal mines safety monitoring with mobile app for admin monitoring.
[2]. T. Porselvi, Janaki B, Priyadarshini K. IoT based coal mine Safety and Health Monitoring System using LoRa WAN. (Mir Sajjad Hussain Talpur, Amjad Chohan, Mashooque Ali Mahar, Fauzia Talpur, Noor Nabi Dahari, Asaduliah Kehar).
[3]. A smart heart beat Analytics System using wearable device. Xiaoke Yang, Lingyu Yang, Jing Zhang.
[4]. Opportunities and Challenges in Health Sensing for Extreme Industrial Environment: Perspectives from Underground Mines(Alok Ranjan, Yanxiao Zhao,Himanshu Bhushan Sahu).
[5]. Iot Based Smart Kit for Coal Miners Safety Purpose.
[6]. Design of IoT Based Coal Mine Safety System Using Arduino UNO.

IJIREEICE

INTERNATIONAL JOURNAL OF INNOVATIVE RESEARCH IN
ELECTRICAL, ELECTRONICS, INSTRUMENTATION AND CONTROL ENGINEERING

A monthly Peer-reviewed & Refereed journal

Impact Factor 8.021

Indexed by Google Scholar, Crossref, Mendeley, Scilit,

UGC approved in year 2017, DORA, SCIENCEOPEN, KOAR

Google Scholar Crossref MENDELEY PlumX Metrics

CERTIFICATE OF PUBLICATION

PROF. T. H. MOHITE

Dept. of Electronics & Telecommunications,

Dr. J. J. Magdum College of Engineering, Jaysingpur, India

Published a paper entitled

"IOT based system for coal miners safety and health Monitoring"

Volume 12, Issue 4, April 2024

DOI: 10.17148/IJIREEICE.2024.12407

Certificate#:IJIREEICE/2024/1

ISSN (Online) 2321–2004
ISSN (Print) 2321–5526

Tejass Publishéérs
Organization

Editor-in-Chief
IJIREEICE

SERTIFIKAAT 証明書 شهادة Sertifikat CERTYFIKAT CERTIFICADO 证书 CEPTIФIKAT 证书 POTVRDA SERTIFIKA

IJIREEICE

INTERNATIONAL JOURNAL OF INNOVATIVE RESEARCH IN
ELECTRICAL, ELECTRONICS, INSTRUMENTATION AND CONTROL ENGINEERING

A monthly Peer-reviewed & Refereed journal

Impact Factor 8.021

Indexed by Google Scholar, Crossref, Mendeley, Scilit,

UGC approved in year 2017, DORA, SCIENCEOPEN, KOAR

Google Scholar Crossref MENDELEY PlumX Metrics

CERTIFICATE OF PUBLICATION

NIKHIL AMIT SHENDAGE

Dept. of Electronics & Telecommunications,

Dr. J. J. Magdum College of Engineering, Jaysingpur, India

Published a paper entitled

"IOT based system for coal miners safety and health Monitoring"

Volume 12, Issue 4, April 2024

DOI: 10.17148/IJIREEICE.2024.12407

Certificate#:IJIREEICE/2024/1

SERTIFIKAAT 証明書 Sertifikat CERTYFIKAT CERTIFICADO 증명서 СЕРТИФИКАТ 证书 POTVRDA SERTIFIKA

ISSN (Online) 2321–2004
ISSN (Print) 2321–5526

Tejass Publishéérs
Organization

Editor-in-Chief
IJIREEICE

IJIREEICE

INTERNATIONAL JOURNAL OF INNOVATIVE RESEARCH IN
ELECTRICAL, ELECTRONICS, INSTRUMENTATION AND CONTROL ENGINEERING

A monthly Peer-reviewed & Refereed journal

Impact Factor 8.021

Indexed by Google Scholar, Crossref, Mendeley, Scilit,

UGC approved in year 2017, DORA, SCIENCEOPEN, KOAR

Google Scholar Crossref MENDELEY PlumX Metrics

CERTIFICATE OF PUBLICATION

MANSING MALHARRAO SHINDE

Dept. of Electronics & Telecommunications,

Dr. J. J. Magdum College of Engineering, Jaysingpur, India

Published a paper entitled

"IOT based system for coal miners safety and health Monitoring"

Volume 12, Issue 4, April 2024

DOI: 10.17148/IJIREEICE.2024.12407

Certificate#:IJIREEICE/2024/1

ISSN (Online) 2321–2004
ISSN (Print) 2321–5526

Tejass Publishéérs
Organization

Editor-in-Chief
IJIREEICE

SERTIFICAAT 証明書 Sertifikat CERTYFIKAT CERTIFICADO 증명서 СЕРТИФИКАТ 证书 POTVRDA SERTIFIKA

www.ijireeice.com

IJIREEICE

INTERNATIONAL JOURNAL OF INNOVATIVE RESEARCH IN
ELECTRICAL, ELECTRONICS, INSTRUMENTATION AND CONTROL ENGINEERING

A monthly Peer-reviewed & Refereed journal

Impact Factor 8.021

Indexed by Google Scholar, Crossref, Mendeley, Scilit,

UGC approved in year 2017, DORA, SCIENCEOPEN, KOAR

Google Scholar Crossref MENDELEY PlumX Metrics

CERTIFICATE OF PUBLICATION

PRATHAMESH MADHUKAR KILLEDAR

Dept. of Electronics & Telecommunications,

Dr. J. J. Magdum College of Engineering, Jaysingpur, India

Published a paper entitled

"IOT based system for coal miners safety and health Monitoring"

Volume 12, Issue 4, April 2024

DOI: **10.17148/IJIREEICE.2024.12407**

Certificate#:IJIREEICE/2024/1

ISSN (Online) 2321–2004
ISSN (Print) 2321–5526

Tejass Publishéérs
Organization

Editor-in-Chief
IJIREEICE

www.ijireeice.com

SERTIFIKAAT 証明書 شهادة Sertifikat CERTYFIKAT CERTIFICADO 증명서 CEPTHΦHKAT 証书 POTVRDA SERTIFIKA

Certificate No: JJMCOE/Ashwamedh_2k24/_____

Dr. J. J. Magdum Trust's

DR. J. J. MAGDUM COLLEGE OF ENGINEERING, JAYSINGPUR.

Approved by AICTE, New Delhi | Affiliated to Shivaji University, Kolhapur | An ISO 21001: 2018 Certified Institute

NAAC "A" Grade Accredited Institute | A+ grade in academic audit by Shivaji University, Kolhapur

AN AUTONOMOUS INSTITUTE

A NATIONAL LEVEL EVENT

ASHWAMEDH 2k24

CERTIFICATE

of Achievement

This certificate is proudly awarded to

MR./MS. Prathamesh M. Killedar

FOR ORGANISING/PARTICIPATING/ACHIEVING — IN THE EVENT

Project Competition OF ASHWAMEDH 2K24 ORGANIZED ON 06TH APRIL, 2024.

Prof. R. A. Bharatiya	Prof. P. P. Patil	Dr. Mrs. S. B. Patil
EVENT CO-ORDINATOR	DEAN STUDENT	PRINCIPAL

Certificate No: JJMCOE/Ashwamedh_2k24/

Dr. J. J. Magdum Trust's

DR. J. J. MAGDUM COLLEGE OF ENGINEERING, JAYSINGPUR.

Approved by AICTE, New Delhi | Affiliated to Shivaji University, Kolhapur | An ISO 21001: 2018 Certified Institute

NAAC "A" Grade Accredited Institute | A+ grade in academic audit by Shivaji University, Kolhapur

AN AUTONOMOUS INSTITUTE

A NATIONAL LEVEL EVENT

ASHWAMEDH 2k24

CERTIFICATE

of Achievement

This certificate is proudly awarded to

MR./~~MS.~~ Mansing M. Shinde

FOR ~~ORGANISING~~/PARTICIPATING/~~ACHIEVING~~ — IN THE EVENT

Project Competition OF ASHWAMEDH 2K24 ORGANIZED ON 06TH APRIL, 2024.

Prof. R. A. Bharatiya	Prof. P. P. Patil	Dr. Mrs. S. B. Patil
EVENT CO-ORDINATOR	DEAN STUDENT	PRINCIPAL

Certificate no: JJMCOE/Ashwamedh_2k24/_____

Dr. J. J. Magdum Trust's

DR. J. J. MAGDUM COLLEGE OF ENGINEERING, JAYSINGPUR.

Approved by AICTE, New Delhi | Affiliated to Shivaji University, Kolhapur | An ISO 21001: 2018 Certified Institute

NAAC "A" Grade Accredited Institute | A+ grade in academic audit by Shivaji University, Kolhapur

AN AUTONOMOUS INSTITUTE

A NATIONAL LEVEL EVENT

ASHWAMEDH 2k24

CERTIFICATE

of Achievement

This certificate is proudly awarded to

MR./MS. Nikhil A. Shendage

FOR ~~ORGANISING~~/PARTICIPATING/~~ACHIEVING~~ — IN THE EVENT

Project Competition OF **ASHWAMEDH 2K24** ORGANIZED ON 06TH APRIL, 2024.

Prof. R. A. Bharatiya	Prof. P. P. Patil	Dr. Mrs. S. B. Patil
EVENT CO-ORDINATOR	DEAN STUDENT	PRINCIPAL

Group No :- 03

IJIREEICE ISSN (O) 2321-2004, ISSN (P) 2321-5526

International Journal of Innovative Research in Electrical, Electronics, Instrumentation and Control Engineering

Impact Factor 8.021 ⁂ Peer-reviewed & Refereed journal ⁂ Vol. 12, Issue 2, February 2024

DOI: 10.17148/IJIREEICE.2024.12217

Ultimate Floor Cleaning Robot

Dr.Prof.T.H.Mohite[1], Shahin Babasab Shikalgar[2], Nikita Dilip Lipare[3], Sayali Vijay Kolhapure[4]

Dept. of Electronics & Telecommunications, Dr. J.J. Magdum College of Engineering, Jaysingpur, India[1-4]

Abstract: Smart dust is collector as its name represent it works smartly or we can say that it is an automatic dust collector. The complete ground cleansing robotics is split into numerous parts, particularly together with an arduino Uno microcontroller, servo, and Dc motor with ultrasonic sensor, motor. This device works with the arduino Uno microcontroller strategies the ultrasonic sensor as a distance detector and a DC motor as a robotic driver, then the dc motor is pushed through the motor shield. As a result, a most efficient and cleaning system is developed to attain perfect cleaning rather than statisfactory cleaning achieved by a preexisting.

Keywords: Arduinouno controller, Ultrasonic sensor, Bluetooth module , Wheels, Battery, LCD display ,Motor Driver

I. INTRODUCTION

Robots are using for different purposes home automation. Flooring robot is the time consuming, it has two modes are the operate automatic mode and manual mode. Manual mode is the direct operated by the mobile application for user automatic mode is all operation are the perform. In manual mode the robot can be also used the clean specific area. Their certain reduced the human effort save the time and work fast. The robot affordable people used to college, school, office, industry etc. This uses ultrasonic sensor can be used as the avoid the obstacle and change the direction, it is automatic control mode. Floor cleaning robot is based on ATMega 328 microcontroller. Robot can perform all operation without interface. In this technological era currently people have taken her linking to develop new designs related to low-cost flooring robots. One of the challenge has been to reduce the number of sensors as it contributes considerably to the cost of the robot.

II. METHDOLOGY

A. *Hardware:*

I. *Block diagram:*

An automatic floor cleaner robot has brushes attached to its sides to collect the dust. This robot uses ultrasonic sensors to avoid obstacles and change is direction. And it has a suction unit that sucks in the dust while moving around the room freely.

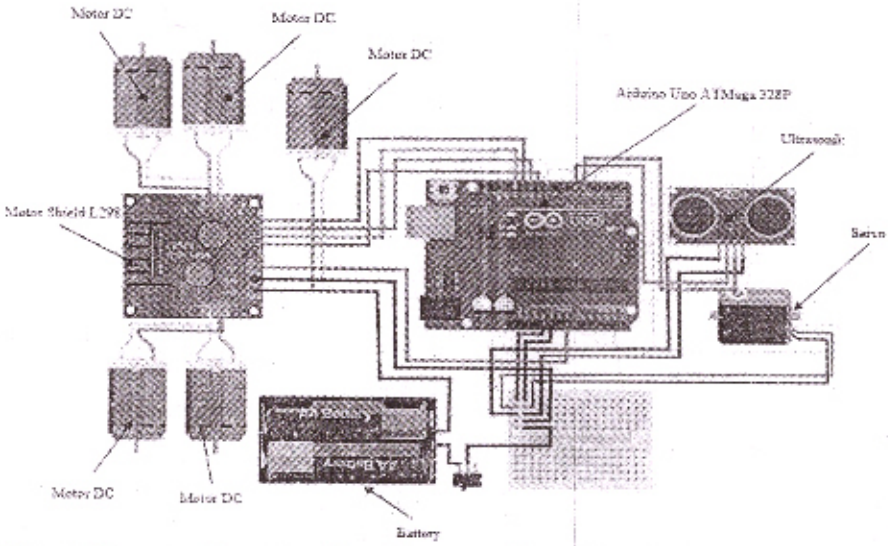

Fig.1. Block Diagram ultimate floor cleaning robot

DOI: 10.17148/IJIREEICE.2024.12217

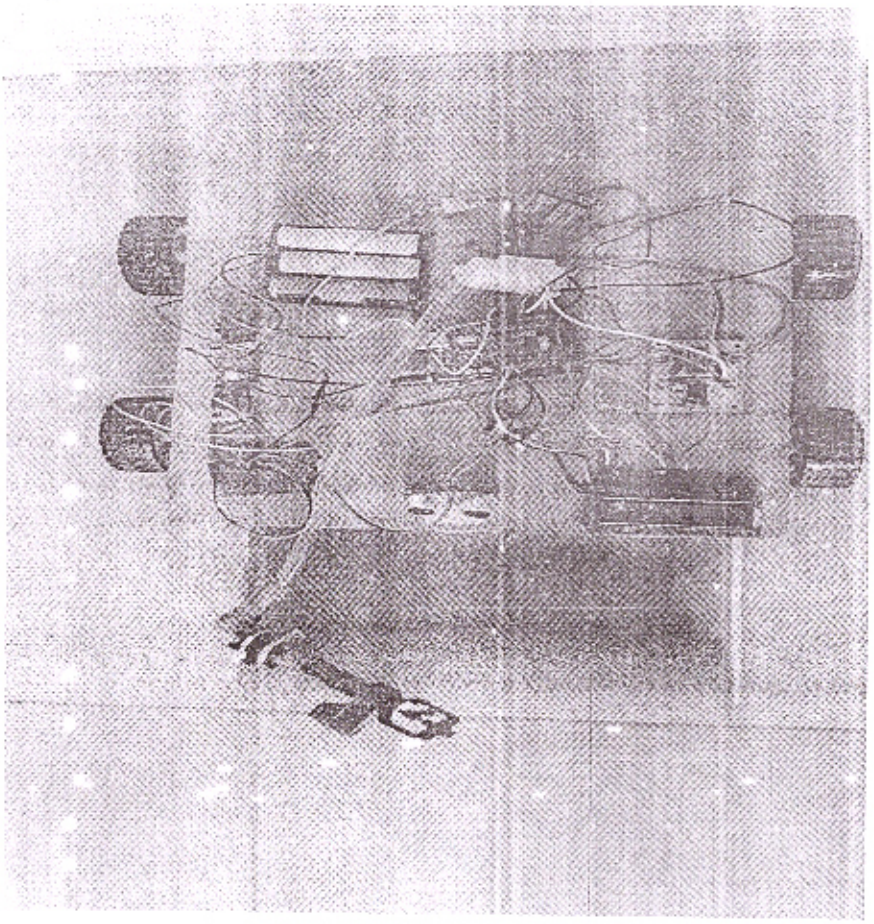

Fig:-Ultimate Floor Cleaning Robot

III. CONCLUSION

A user friendly floor cleaning robot can be developed with to different mode of controlling (manual and automatic mode) using arduino board with more electronic funcationality, create an automatic floor cleaning robot prototype using the arduino uno microcontroller a data processor and an ultrasonic sensor a distance controller o that if someone block floor cleaning prototype ill automatically run in the opposite direction.

REFERENCES

[1]. Shripad Malavadikar,Swapnil Mungale,Toshiba Johri,Harshad Lokhande,"Ultimate floaring Cleaning robot "IERJ,Vol.2,Issue 8 page 2617-2620,2017 ISSN 2395-1621.

[2]. Assist.Prof.Jyoti Morbale,Manya Jain,Pankaj Singh Rawat ,"Ultimate Folaring Cleaning Robot"International Research Journal Of Engineering and Technology (IRJET),Vol.4,Issue 04,April 2017.

[3]. Jens-Steffen Gutmann,.Kristen Culp,Mario E.Munich and Paolo pirjanian."The social impact of a systematic Floor Cleaner"In IEEE international workshop on advance robotics and its social impact,may 2012.

[4]. Prof.Taware R.D,Vaishali Hasure,puja Ghule ,Komal Shelke."Design and development of Floor cleaner robot (Automatic and Manual Mode"IJRTI 2017 volume 2,Issue 4 ISSN:2456-33.

[5]. A technical analysis of autonomous floor cleaning robot baedon US Granted Patents,Europen International Journal Of Science and Technology Vol.2

IJIREEICE

INTERNATIONAL JOURNAL OF INNOVATIVE RESEARCH IN
ELECTRICAL, ELECTRONICS, INSTRUMENTATION AND CONTROL ENGINEERING

A monthly Peer-reviewed & Refereed journal

Impact Factor 8.021

Indexed by Google Scholar, Crossref, Mendeley, Scilit,

UGC approved in year 2017, DORA, SCIENCEOPEN, KOAR

Google Scholar Crossref MENDELEY PlumX Metrics

CERTIFICATE OF PUBLICATION

DR.PROF.T.H.MOHITE

Dept. of Electronics & Telecommunications, Dr. J.J. Magdum College of Engineering,

Jaysingpur, India

Published a paper entitled

Ultimate Floor Cleaning Robot

Volume 12, Issue 2, February 2024

DOI: 10.17148/IJIREEICE.2024.12217

Certificate#:IJIREEICE/2024/1

ISSN (Online) 2321–2004
ISSN (Print) 2321–5526

Tejass Publishéérs
Organization

Editor-in-Chief
IJIREEICE

SERTIFIKAAT 証明書 Sertifikat CERTIFIKAT CERTIFICADO 증명서 СЕРТИФИКАТ 证书 POTVRDA SERTIFIKA

www.ijireeice.com

IJIREEICE

INTERNATIONAL JOURNAL OF INNOVATIVE RESEARCH IN
ELECTRICAL, ELECTRONICS, INSTRUMENTATION AND CONTROL ENGINEERING

A monthly Peer-reviewed & Refereed journal

Impact Factor 8.021

Indexed by Google Scholar, Crossref, Mendeley, Scilit,

UGC approved in year 2017, DORA, SCIENCEOPEN, KOAR

Google Scholar Crossref MENDELEY PlumX Metrics

CERTIFICATE OF PUBLICATION

SHAHIN BABASAB SHIKALGAR

Dept. of Electronics & Telecommunications, Dr. J.J. Magdum College of Engineering,
Jaysingpur, India

Published a paper entitled

Ultimate Floor Cleaning Robot

Volume 12, Issue 2, February 2024

DOI: 10.17148/IJIREEICE.2024.12217

Certificate#:IJIREEICE/2024/1

ISSN (Online) 2321–2004
ISSN (Print) 2321–5526

Tejass Publishéers
Organization

Editor-in-Chief
IJIREEICE

www.ijireeice.com

SERTIFIKAAT 証明書 Sertifikat CERTYFIKAT CERTIFICADO 증명서 CEPTHPHKAT 証書 POTVRDA SERTIFIKA

IJIREEICE

INTERNATIONAL JOURNAL OF INNOVATIVE RESEARCH IN
ELECTRICAL, ELECTRONICS, INSTRUMENTATION AND CONTROL ENGINEERING

A monthly Peer-reviewed & Refereed journal

Impact Factor 8.021

Indexed by Google Scholar, Crossref, Mendeley, Scilit,

UGC approved in year 2017, DORA, SCIENCEOPEN, KOAR

Google Scholar Crossref MENDELEY PlumX Metrics

CERTIFICATE OF PUBLICATION

NIKITA DILIP LIPARE

Dept. of Electronics & Telecommunications, Dr. J.J. Magdum College of Engineering

Jaysingpur, India

Published a paper entitled

Ultimate Floor Cleaning Robot

Volume 12, Issue 2, February 2024

DOI: 10.17148/IJIREEICE.2024.12217

Certificate#:IJIREEICE/2024/1

ISSN (Online) 2321–2004
ISSN (Print) 2321–5526

Tejass Publishèérs
Organization

Editor-in-Chief
IJIREEICE

SERTIFIKAAT 証明書 Sertifikat CERTYFIKAT CERTIFICADO 증명서 СЕРТИФИКАТ 证书 POTVRDA SERTIFIKA

6.5.1.2.

Dr. J. J. Magdum Trust's (No. E/902)

Dr. J. J. Magdum College of Engineering, Jaysingpur

Department of Civil Engineering

Student Publication

2023-24

Sr no	Name of student	Publisher	Paper Title	Volume	Month	ISSN/ISBN	Page no
1.	Prathmesh Kamble Sakshi Patil Zorengpuia Liantluang Omkar Erondole	International Journal for Research in Applied Science & Engineering Technology	Preparing Design Aids for FE550 Steel for M20 Grade of Concrete using SP-16	Vol. 12, Issue- IV	April 2024	2321-9653	3646-3657
2.	Prathmesh Kamble Sakshi Patil Zorengpuia Liantluang Omkar Erondole	International Journal for Research in Applied Science & Engineering Technology	Preparing Design Aids for FE550 Steel for M20 Grade of Concrete using SP-16	Vol. 12, Issue- IV	April 2024	2321-9653	3445-3456

Dr. J. S. Lambe
HOD, Dept. Of Civil Engineering

Dr. J. J. MAGADUM COLLEGE OF ENGINEERING
DEPARTMENT OF CIVIL ENGINEERING
JAYSINGPUR - 416 101.

6.5.1.2.

iJRASET
International Journal For Research in
Applied Science and Engineering Technology

INTERNATIONAL JOURNAL FOR RESEARCH

IN APPLIED SCIENCE & ENGINEERING TECHNOLOGY

Volume: 12 Issue: IV Month of publication: April 2024

DOI: https://doi.org/10.22214/ijraset.2024.60623

www.ijraset.com

Call: 08813907089 | E-mail ID: ijraset@gmail.com

International Journal for Research in Applied Science & Engineering Technology (IJRASET)
ISSN: 2321-9653; IC Value: 45.98; SJ Impact Factor: 7.538
Volume 12 Issue IV Apr 2024- Available at www.ijraset.com

Preparing Design Aids for Fe550 Steel for M25 Grade of using Concrete from SP-16

Prof. Kiran Ghodke[1], Mr. Prathamesh Kamble[2], Ms. Sakshi Patil[3], Mr. Zorengpuia Liantluang[4], Mr. Omkar Erandole[5]
[1]*Zorengpuia Liantluang, Dr. J.J. Magdum College of Engineering, Jaysingpur*
[2]*Sakshi Patil, Dr. J.J. Magdum College of Engineering, Jaysingpur*
[3]*Prathamesh Kamble , Dr. J.J. Magdum College of Engineering, Jaysingpur*
[4]*Omkar Erandole, Dr. J.J. Magdum College of Engineering, Jaysingpur*
[5]*Prof .Kiran Ghodke Dr. J.J. Magdum College of Engineering, Jaysingpur*

Abstract: The main purpose of this paper presentation is to develop design aids for Fe 550 grade of steel from sp 16 handbook. The design aids prepared will be in the form of tables which will benefit in the calculations of various components of concrete structures. To prepare design aids for FE550, you would need to focus on creating resources that cover various aspects related to structural design, specifically for materials like Fe550. Design aids typically include information on material strength, stress-strain relationships, flexural members, compression members, shear and torsion, development length, anchorage, deflection calculation, and general tables, explanations of the basis of preparation, and worked examples illustrating the use of the design aids.

I. INTRODUCTION

SP 16 is a Handbook consisting of various tables to assist the Concrete Designers to find the data and results quickly and some examples how to use those tables. The sp 16:1980 has tables and charts that help structural engineers to design simple sections rapidly for Fe 250, Fe 415 and Fe 500 but do not include grade of steel higher than Fe 500.

IS 456:2000 is a statutory authority to a designer who has to follow the clauses in every letter and spirit.

IS 456 contains complete set of guidelines & information regarding Reinforced Concrete while SP 16 is aid to IS 456 i.e., SP16 assists in designing reinforced concrete structures according to IS456.

The paper presentation focus on the steel of grade Fe 550 which is not available in the sp16 handbook.

II. LITERATURE REVIEW

1] These design aids have been prepared on the basis of work done by Shri P. Padmanabhan, Officer on Special Duty, ISI. Shri B. R. Narayanappa, Assistant Director, ISI was also associated with the work. The draft Handbook was circulated for review to Central Public Works Department, New Delhi; Cement Research Institute of India, New Delhi; Metallurgical and Engineering Consultants (India) Limited, Ranchi, Central Building Research Institute, Roorkee; Structural Engineering Research Centre, Madras; M/s C. R. Narayana Rao, Madras; and Shri K. K. Nambiar, Madras and the views received have been taken into consideration while finalizing the Design Aids.

[2] IS 456:2000

III. METHODOLOGY

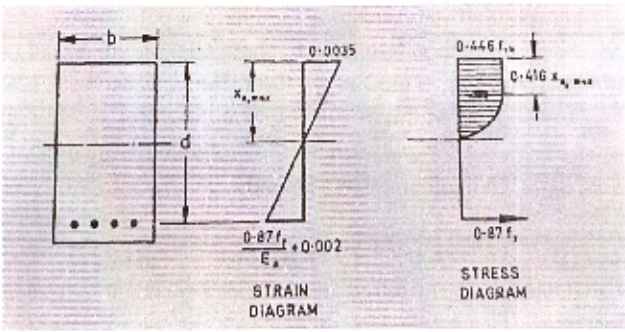

Fig 1.Stress - strain Diagram

In the figure,

b = effective width of beam

D = overall depth

d = effective depth of beam

xu = depth of neutral axis from compressive phase od section

Ecu = ultimate compressive strength in concrete

Esu = ultimate tensile strength of steel

Cu = ultimate compressive force

Tu = ultimate tensile force

z = lever arm

A. Total Ultimate Compressive Force

Cu = area of stress block x width of beam

From strain diagram, using similar triangle property

xu = 0.0035

a = 0.002

a x 0.0035 = xu x 0.002

a = xu x 0.002/0.0035

= 0.57 xu

Area of stress block = area of rectangle + area of parabola

= (0.43 xu + 0.45 fck) + (2/3 x 0.45 fck x 0.57 xu)

= 0.193 xu fck + 0.171 xu fck

= 0.364 xu fck

Compressive Force(Cu):

Cu = 0.364 xu fck b

B. Tensile Force (Tu)

Tu = stress in steel x area of steel

= fy/ 1.15 x Ast

= 0.87 fy Ast

Depth of Neutral Axis (xu):

Cu = Tu

0.36 x fck x xu x b = 0.87 x fy x Ast

xu = 0.87 fy Ast / 0.36 fck xu b

C. Limiting or Maximum Depth of Neutral Axis

(xu lim or xu max)

Based on Assumption on Theory of Bending, the xu max can be obtain

For Fe 550, fy = 550

Esu = (fy/ 1.15 Es) + 0.002

= (550/ 1.15 x 2 x105) + 0.002

= 4.39 x 10-3

From similar triangle property:

xu = 0.0035

d-xu = 4.39 x 10-3

4.39 x 10-3 xu = 0.0035 x (d-xu)

4.39 x 10-3 xu = 0.0035d - 0.0035xu

0.0035d = 4.39x10-3 xu + 0.0035d

0.0035d = 7.89x10-3xu

xu = (0.0035/7.89x10-3) d
xu = 0.44d
xu max or xu lim = 0.44d

D. Limiting or Maximum Percentage of Steel

(Pt lim or Pt max)
xu < xu max
0.87 fy Ast / 0.36 fck b < xu max
Pt = (Ast / b x d) 100
For Fe 550, fy = 550
(0.87 fy Ast / 0.36 fck b) = xu max
For Fe 550, xu max = 0.44d
(0.87 fy Ast / 0.36 fck b) = 0.44d
(Ast / b x d) = 0.44 x 0.36 x fck / 0.87 x fy
Multiplying both sides by 100
(Ast / b x d) x 100 = (0.44 x 0.36 x fck / 0.87 x fy) x 100
(Ast / b x d) x 100 = 0.033 fck
Pt lim or Pt max = 0.033 fck

E. Limiting or Maximum Moment of Resistance

Mu = Cu x z
Mu max or Mu lim = 0.36 fck b xu (d – 0.42xu)
For Mu lim , xu = xu lim
For Fe 550, xu max = 0.44d
Mu max or Mu lim = 0.36 fck b xu max (d – 0.42 xu max)
= 0.36 x fck x b x 0.44d x (d – 0.42 x 0.44d)
= 0.158 fck b d (d – 0.148d)
= 0.158 fck b d (0.86d)
= 0.128 fck b d2
Mu max or Mu lim = 0.128 fck b d2

F. Moment of Resistance of Slab

Data: fck = 25 N/mm2
fy = 550 N/mm2
d = 100 mm
For Fe 550,
Ptlim = 0.033 fck
= 0.033 x 25
= 0.825%
Ast = (area of 1 bar/ spacing) x 1000
For 6 mm diameter bar at 50 mm centre to centre spacing
Ast = {(π/4 x 6^2)/ 50}x 1000
= 565.54 mm2
From IS 456:2000 ANNEX:G
Mu = 0.87 fy Ast d {1- (Ast fy / fck b d)}
= 0.87 x 550 x 565.54 x 100 {1- (565.54 x 550/ 25 x 100 x 1000)}
= 23.69 x 10^6 N.mm
= 23.69 KN.m

G. Percentage of Steel for Singly Reinforced Section

$Ast = (0.5\ fck / fy)\ (1 - \sqrt{1 - (4.6 \times Mu / fck \times b \times d^2)}\ b \times d$

$Ast / b \times d = (0.5\ fck / fy)\ (1 - \sqrt{1 - (4.6 \times Mu / fck \times b \times d^2)}$

Multiplying both sides by 100

$(Ast / bxd)100 = (0.5\ fck / fy)\ (1 - \sqrt{1 - (4.6 xMu / fck\ xbxd^2)}100$

Here, $Pt = (Ast / b \times d)\ 100$

Hence ,

$Pt = (0.5\ fck / fy)\ (1 - \sqrt{1 - (4.6 \times Mu / fck \times bx\ d^2)}\ 100$

Sample Calculation :

For $fck = 25\ N/mm^2$ and $fy = 550\ N/mm^2$

For $(Mu / b \times d) = 0.30$

$Pt = (0.5 \times 25 / 550)\ (1 - \sqrt{1 - (4.6 \times 0.30 / 25)}\ 100$

$Pt = 0.064$

H. Table For Moment Of Resistance

TABLE NO.1.1

For $Fy = 550\ N/mm^2$ $Fck = 25\ N/mm^2$ $d = 100$ mm

Bar Spacing (cm)	Bar Diameter 6	8	10	12
5	23.69	37.46	49.19	54.37
7.5	16.54	27.34	38.56	48.22
10	12.68	21.39	31.09	40.65
12.5	10.28	17.53	25.91	34.68
15	8.64	14.85	22.17	30.09
17.5	7.45	12.87	19.35	26.53
20	6.55	11.36	17.17	23.69
22.5	5.84	10.16	15.42	21.39
25	5.27	9.19	13.99	19.49
27.5	4.80	8.39	12.42	17.19
30	4.41	7.72	11.80	16.54

TABLE NO 1.2

For $Fy = 550\ N/mm^2$ $Fck = 25\ N/mm^2$ $d = 125$ mm

Bar Spacing (cm)	Bar Diameter 6	8	10	12
5	30.45	49.99	67.98	81.43
7.5	21.05	35.38	51.09	66.26
10	16.06	27.40	40.48	54.18
12.5	12.99	22.34	33.42	45.50
15	10.90	18.86	28.43	39.11
17.5	9.38	16.31	27.72	34.26
20	8.24	14.36	21.86	30.40
22.5	7.34	12.83	19.59	27.40
25	6.62	11.60	17.72	24.90
27.5	6.03	10.58	16.24	22.82
30	5.54	9.72	14.94	21.0

TABLE NO 1.3

For Fy = 550 N/mm^2 Fck = 25 N/mm^2 d = 150 mm

Bar Spacing (cm)	Bar Diameter			
	6	8	10	12
5	37.22	61.51	86.71	108.37
7.5	25.56	43.37	63.59	84.24
10	19.45	33.47	49.86	67.68
12.5	15.69	27.15	40.93	56.30
15	13.15	22.86	34.69	48.12
17.5	11.15	19.74	30.09	41.98
20	9.93	17.37	26.86	37.21
22.5	8.85	15.50	23.77	33.41
25	7.98	14.00	21.51	30.31
27.5	7.26	12.76	19.66	27.77
30	6.67	11.73	18.07	25.56

TABLE NO.1.4

For Fy = 550 N/mm^2 Fck = 25 N/mm^2 d = 175 mm

Bar Spacing (cm)	Bar Diameter			
	6	8	10	12
5	43.98	73.54	105.50	135.43
7.5	30.07	51.39	76.12	102.28
10	22.83	39.43	59.26	81.21
12.5	18.40	31.97	48.45	67.13
15	15.40	26.87	40.95	57.14
17.5	13.25	23.18	35.45	49.71
20	11.62	20.38	31.25	43.98
22.5	10.35	18.18	27.94	39.42
25	9.33	16.41	25.26	35.72
27.5	8.49	14.95	23.08	32.65
30	7.79	13.73	21.20	30.07

TABLE NO.1.5

For Fy = 550 N/mm^2 Fck = 25 N/mm^2 d = 200 mm

Bar Spacing (cm)	Bar Diameter			
	6	8	10	12
5	50.75	85.56	124.34	162.61
7.5	34.58	59.41	88.67	120.37
10	26.21	45.44	68.67	94.77
12.5	21.10	36.78	55.97	77.97
15	17.66	30.88	47.22	66.17
17.5	15.18	26.61	40.83	57.54
20	13.31	23.38	35.96	50.75
22.5	11.85	20.85	32.12	45.44
25	10.68	18.81	29.03	41.14
27.5	9.728	17.14	26.51	37.58
30	8.924	15.73	24.33	34.58

1. Table For Percentage Of Steel

TABLE NO 1.6

For Fy = 550 N/mm^2 Fck = 25 N/mm^2

Mu/bd^2	Pt	Mu/bd^2	Pt
0.30	0.064	2.50	0.610
0.35	0.075	2.55	0.624
0.40	0.086	2.60	0.639
0.45	0.097	2.65	0.654
0.50	0.108	2.70	0.668
0.55	0.119	2.75	0.683
0.60	0.131	2.80	0.699
0.65	0.142	2.85	0.714
0.70	0.153	2.90	0.729
0.75	0.165	2.95	0.745
0.80	0.176	3.00	0.761
0.85	0.188	3.05	0.776
0.90	0.199	3.10	0.792
0.95	0.211	3.15	0.809
1.00	0.222	3.20	0.825
1.05	0.234	3.25	0.842
1.10	0.246	3.30	0.859
1.15	0.258	3.32	0.865
1.20	0.270	3.34	0.872
1.25	0.282	3.36	0.879
1.30	0.294	3.38	0.886
1.35	0.306	3.40	0.893
1.40	0.318	3.42	0.900
1.45	0.331	3.44	0.907
1.50	0.343	3.46	0.914
1.55	0.355	3.48	0.921
1.60	0.368	3.50	0.928
1.65	0.381	3.52	0.935
1.70	0.393	3.54	0.942
1.75	0.406	3.56	0.949
1.80	0.419	3.58	0.956
1.85	0.432	3.60	0.964
1.90	0.445	3.62	0.971
1.95	0.458	3.64	0.978
2.00	0.472	3.66	0.986
2.05	0.485	3.68	0.993
2.10	0.498	3.70	1.001
2.15	0.512	3.72	1.008
2.20	0.526	3.74	1.016
2.25	0.539		
2.30	0.553		
2.35	0.567		
2.40	0.581		
2.45	0.596		

J. Slab Design by Manual Calculation

Roof Slab = 4m x5 m
Thickness = 125mm
Live Load = 3 KN/m^2
Floor Finish = 1 KN/m^2
fck = 25 N/mm^2
fy = 550 N/mm^2

Step 1: Check the type of Slab

ly/lx = 5/4
= 1.25 < 2
Design as Two Way Slab

Step 2: Provide D = 125 mm
Eff. cover d'= 25 mm
Eff. depth d = 125 – 25 = 100 mm

Step 3: Calculation of effective span (l_{eff})

As per IS 456: 2000 Clause no 22.2
l_{eff} is lesser of :
1) lx + d = 4 + 0.1 = 4.1m
2) lx + 0.3/2 +0.3/2 = 4.3m
Take l_{eff} = 4.1m

Step 4: Load Calculation

Consider 1m width of strip
1) Self Weight = b x D x 25
= 1 x 0.125 x 25
= 3.125 KN/m
2) Live Load = 3 KN/m
3) Floor Finish = 1 KN/m
Total Load (W) = 3.125 +3 +1
= 7.125 KN/m

Step 5: Calculation of Moment

As per IS 456:2000 ANNEX D
Mux = 1.5 x αx x W x l_{eff}^2
Muy = 1.5 x αy x W x l_{eff}^2
For ly/lx = 1.25
αx = 0.075
αy = 0.056
Mux = 1.5 x 0.075 x 7.125 x 4.1^2
= 13.47 x 10^6 N.mm
Muy = 1.5 x 0.056 x 7.125 x 4.1^2
= 10.06 x 10^6 N.mm

Step 6: Equate Mux with Mulim

As per grade of Steel Fe 500
Mu lim = 0.129 x fck x b x d^2
= 0.129 x 25 x 1000 x 100^2
= 32.25 KNm
Mux < Mu lim
Hence provided depth is sufficient

Step 7: Calculation of Steel in both direction

Along Shorter Span

$Ast_x = (0.5\ fck / fy)\ (1-\sqrt{1-(4.6 \times Mu / fck \times b \times d^2)}\ bx\ d$

$= (0.5x25/550)\ (1 - \sqrt{1-(4.6x13.47x10^6/25x1000x100^2)}$

$1000x100$

$= 301.66\ mm^2$

As per IS 456:2000 Clause no 26.5.2.1

$Ast_{min} = 0.12\% \times b \times D$

$= 0.12/100 \times 1000 \times 125$

$= 150\ mm^2$

Provide 10mm dia. bars

Max dia. = 1/8 x D

= 1/8 x 125

= 15.625 > 10

Hence the diameter is safe.

Spacing = $\{(\pi/4 \times 10^2)/ 301.66\} \times 1000$

= 260.36 mm

~ 260 mm

Check for Spacing:

1) Calculated Spacing = 260 mm

2) 3 x d = 3 x 100 = 300 mm

3) 300 mm

Provide 10mm dia. bars at 260 mm c/c

Along longer span:

$Ast_y = (0.5\ fck / fy)\ (1 - \sqrt{1-(4.6 \times Mu / fck \times b \times d^2)}\ b\ xd$

$= (0.5x25/550)\ (1 -\sqrt{(4.6x10.06x10^6/20x1000x100^2)}$

$1000x100$

$= 221.10\ mm^2$

Provide 10 mm dia. bars

Spacing = $\{(\pi/4 \times 10^2)/ 221.10\} \times 1000$

= 355.22 mm ~ 350mm

Check for Spacing:

1) Calculated Spacing = 350 mm

2) 3 x d = 3 x 100 = 300 mm

3) 300 mm

Provide 10mm dia. bars at 300 mm c/c

Step 8: Check for Shear

As per IS 456:2000 Clause 40.1

$\tau_v < k \times \tau_c$

Here $\tau_v = Vu / b \times d$

$Vu = Wu \times l_{eff} / 2$

$= 1.5 \times 7.125 \times 4.1 / 2$

$= 21.90\ KN$

So, $\tau_v = 21.90 \times 10^3 / 1000 \times 100$

$= 0.21\ N / mm^2$

As per IS 456:2000 clause no 40.2.1.1

For D = 125, k = 1.30 mm

Pt = (Ast / b x d) x 100

= (301.66 / 1000 x 100) x 100
= 0.30%
As per IS 456:2000 Table 19
Using Interpolation Method
For Pt = 0.30% , τ_c = 0.38 N/mm^2
k x τ_c = 1.30 x 0.38
= 0.49 N/mm^2
Here, τ_v < k x τ_c
Safe in Shear

K. Slab Design By SP-16 Chart

Roof Slab = 4m x5 m
Thickness = 125mm
fck = 25 N/mm2
fy = 550 N/mm2
Here, Mux = 13.47 KN.m
Muy = 10.06KN.m
Providing 10 mm dia. bars
From sp 16 chart
Spacing along shorter span = 250 mm c/c
Spacing along longer span = 300 mm c/c

L. Beam Design By Manual Calculation

Given: fck = 25 N/mm^2
fy = 550 N/mm^2
Slab Size = 5 x 4 m
Slab Thickness = 125 mm
l = 4 m
Assume: b = 230 mm
Live Load = 3 KN/m^2
Floor Finish = 1 KN/m^2
Step 1: Calculation of Eff. Depth
l/d = 10
4/d = 10
d = 0.4 m = 400 mm
Step 2: Calculation of Total Depth
Assume: Clear cover = 20 mm
Main bar = 25 mm
Stirrups = 8 mm
D = 400 + 20 + 8 + 12.5
= 440.5 ~ 445 mm
Here, d = 400 mm & D = 445 mm
Step 3: Load Calculation
a) Slab Load
i) D.L = D x 25 = 0.125 x 25 = 3.125 KN/m^2
ii) L.L = 3 KN/m^2
iii) F.F = 1 KN/m^2
Total (w) = 3.125 + 3 + 1 = 7.125 KN/m^2
Load on Beam = ½ x b x h x w
(w_1) = ½ x 4.46 x 2.23 x 7.125

No Dues
Ex. 1324.

International Journal for Research in Applied Science & Engineering Technology (IJRASET)
ISSN: 2321-9653; IC Value: 45.98; SJ Impact Factor: 7.538
Volume 12 Issue IV Apr 2024- Available at www.ijraset.com

= 35.43/ 4.46
= 7.94 KN/m
b) Wall Load
(w_2) = b x d x 20
= 0.23 x 2.65 x 20
= 12.19 KN/m
c) Self Weight of Beam
(w_3) = b x D x 25
= 0.23 x 0.445 x 25
= 2.56 KN/m
Total load = $w_1 + w_2 + w_3$
= 7.94 + 12.19 + 2.56
= 22.69 KN/m
Step 4: Calculation of Eff. Sp
l_{eff} is lesser of:
i) l + d = 4 + 0.4 = 4.4 m
ii) c/c between support = 4.23 m
Here, l_{eff} = 4.23 m
Step 5: Moment Calculation
Mu = 1.5 x w x l_{eff}^2 / 8
= 1.5 x 22.69 x 4.23^2 / 8
= 76.12 KN/m
Step 6: Calculation of Mu lim
Mu lim = 0.129 x fck x b x d^2
= 0.129 x 25 x 230 x 400^2
= 118.68 KN/m
Mu < Mu lim
The section is under reinforced and d_{prov} is sufficient
Step 7: Calculation of Steel
Ast = (0.5 fck / fy) (1 - $\sqrt{1 - (4.6 \times Mu / fck \times b \times d^2)}$ b x d
= (0.5x25/550) (1 - $\sqrt{1 - (4.6 \times 76.12 \times 10^6 / 25 \times 230 \times 400^2)}$ 230 x 400
= 445.32 mm^2
Step 8: Calculation of Ast min
Ast min = 0.85/fy x b x d
= 0.85/550 x 230 x 400
= 142.18 mm^2
Ast > Ast min hence safe
Step 9: Calculation of no of bars
Assume 16 mm dia. bars
No of Bars = Ast / (π/4 x 16^2)
= 445.32 / 201.06
= 2.21 nos
Provide 3 # 16 mm dia. bars for the main bars
Provide 2 # 12 mm dia. bars for the anchor bars
Step 10: Check for Shear
Vu = Wu x l_{eff} / 2
= 1.5 x 22.69 x 4.23 / 2
= 71.98 KN
τ_v = Vu / b x d
τ_v = 71.98x 10^3 / 230 x 400

$= 0.78\ N/mm^2$

$Pt = (Ast_{prov} / b \times d) \times 100$

$= \{(\pi/4 \times 3 \times 16^2)/\ 230 \times 400\} \times 100$

$= 0.65\%$

As per IS 456:2000 Table 19

Using Interpolation Method

For $Pt = 0.65\%$, $\tau_c = 0.54\ N/mm^2$

As per IS 456:2000 Table 20

$\tau_{cmax} = 3.1\ N/mm^2$

$\tau_{cmax} > \tau_v > \tau_c$

Shear Reinforcement is required

Step 11: Calculation of Vus

$Vus = Vu - Vuc$

$= 71.98 \times 10^3 - (\tau_c \times b \times d)$

$= 71.78 \times 10^3 - (0.54 \times 230 \times 400)$

$= 22.3\ KN$

Provide 2 legged 8 mm dia. bars

$Asv = (\pi/4 \times 2 \times 8^2) = 100.53\ mm^2$

$Spacing = 0.87 \times fy \times Asv \times d/\ Vus$

$= 0.87 \times 550 \times 100.53 \times 400/\ 22.3 \times 10^3$

$= 862.84\ mm$

Step 12: Check for Spacing

i) Calculated = 862.84 mm

ii) $0.735\ d = 0.75 \times 400 = 300\ mm$

iii) 300 mm

Provide 2 legged 8 mm dia. bars at 300 mm c/c

M. Beam Design By sp-16 Chart

$Mu = 76.12\ KN.m$

$b = 239\ mm$

$d = 400\ mm$

$fck = 25\ N/mm^2$

$fy = 550\ N/mm^2$

Step 1: $Mu / b \times d^2 = 76.12 \times 10^6/\ 230 \times 400^2$

$= 2.07\ N/mm^2$

Step 2: From sp 16 chart for Pt

Using Interpolation Technique

Pt for $Mu/b \times d^2 = 2.07$, $\underline{Pt = 0.490\%}$

Step 3: Steel Calculation

$Ast = (Pt/100) \times b \times d$

$= (0.490/100) \times 230 \times 400$

$= 450.8\ mm^2$

$Ast\ min = (0.87/fy)\ b \times d$

$= (0.87/550) \times 230 \times 400$

$= 142.18\ mm^2$

Ast > Ast min hence safe

Assume 16 mm dia. bars

No of bars = Ast/ area of 1 bar

$= 450.8 / (\pi/4 \times 16^2)$

$= 2.24 \sim 3$ Bars

IV. RESULT

Comparision of Slab Design		
Slab	Manual Calculation	Sp 16 chart
Slab Design	Spacing in longer span = 300 mm c/c	Spacing in longer span = 300 mm c/c
	Spacing in shorter span = 260 mm c/c	Spacing in shorter span = 250 mm c/c

Beam	Manual cal.	Sp-16 chart
Beam	Ast = 445.32 mm^2	Ast = 450.8 mm^2
	Steel provided = 3 # 16 mm dia. bars	Steel provided = 3 # 16 mm dia. bars

V. CONCLUSION

Studying design aids for FE 550 grade of steel can lead to conclusions regarding its structural properties, suitability for various applications, and the effectiveness of design guidelines in optimizing performance and safety. These conclusions can inform engineers and designers about the best practices for utilizing FE 550 grade steel in their projects, considering factors such as strength, ductility, and cost-effectiveness.

REFERENCES

[1] sp 16:1980
[2] IS 456:2000
[3] Gorgolewski, Mark. "The implications of reuse and recycling for the design of steel buildings." Can J Civ Eng 33 (2006): 489-49
[4] Rossi, Barbara. "Discussion on the use of stainless steel in constructions in view of sustainability." Thin-Walled Struct 83 (2014): 182-189.
[5] Wang, R.; Shenoi, R.A. Experimental and numerical study on ultimate strength of steel tubular members with pitting corrosion damage. Mar. Struct. 2019, 64, 124–137
[6] EN 1993−1−1; Eurocode 3: Design of Steel Structures—Part 1-1: General Rules and Rules for Buildings. European Committee for Standardisation: Brussels, Belgium, 2004.

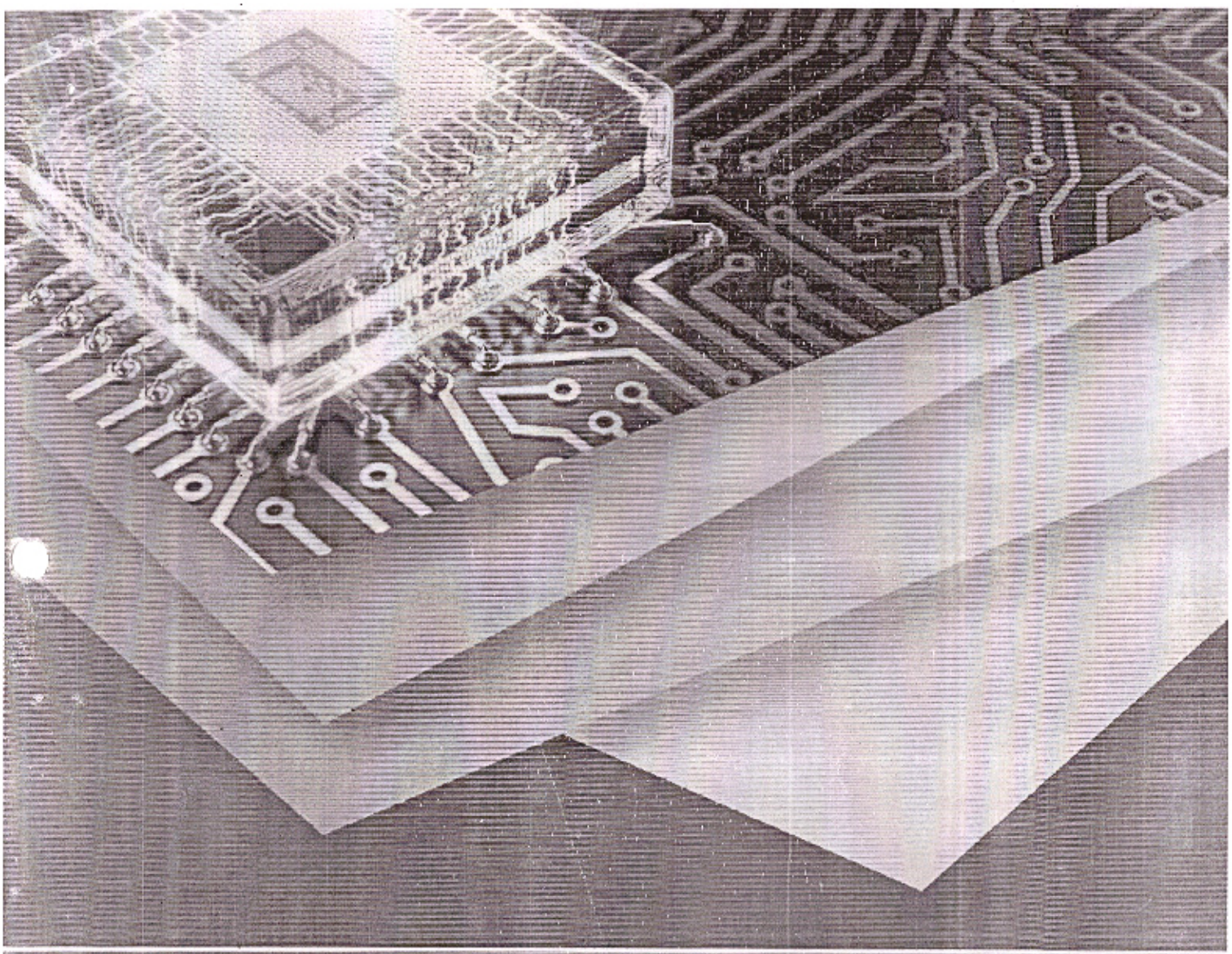

10.22214/IJRASET

INDEX COPERNICUS 45.98

IMPACT FACTOR: 7.129

IMPACT FACTOR: 7.429

INTERNATIONAL JOURNAL FOR RESEARCH

IN APPLIED SCIENCE & ENGINEERING TECHNOLOGY

Dr. J. J. Magdum Trust's (No. E/902)

Dr. J. J. Magdum College of Engineering, Jaysingpur

Autonomous Institute & NAAC A grade institute

Approved by A.I.C.T.E, New Delhi, Recognized by Govt. of Maharashtra,

Affiliated to Shivaji University Kolhapur. Shirol-Wadi Road, Agar bhag, Jaysingpur -416101

List of paper published by Final year students for academic year 2023-24

Sr.No.	Title of paper	Name of the author/s	Department of the teacher	Name of journal	Year of publication	ISSN number	Link to the recognition in UGC enlistment of the Journal
1	Techspot infotech website	Pranali Gaikwad	MCA	IRJMETS	2024	e-ISSN 2582-5208	www.irjmets.com
2	Fortifing Cloud-Based Application: A comprehensivr analysis of cyber security Measures	Abdulrahman Mujawar	MCA	MAT	2024		https://matjournals.com
3	Advance face recognition student attendance system	Pooja Mhetre	MCA	IRJMETS	2024	e-ISSN 2582-5208	www.irjmets.com
4	Blood bank management for life saving efficiency	Ankita Ravatale	MCA	IRJMETS	2024	e-ISSN 2582-5208	www.irjmets.com

Prof. P. N. Patil
IQAC Coordinator

Prof. N. C.Desai
HOD MCA

Dr. J. J. Magdum College of Engineering MCA Dept. Jaysingpur 416 101

International Research Journal Of Modernization in Engineering Technology and Science

(Peer-Reviewed, Open Access, Fully Refereed International Journal)

e-ISSN: 2582-5208

Ref: IRJMETS/Certificate/Volume 06/Issue 03/60300144543

Date: 28/03/2024

Certificate of Publication

This is to certify that author "**Pooja Mhetre**" with paper ID "**IRJMETS60300144543**" has published a paper entitled "ADVANCE FACE RECOGNITION STUDENT ATTENDANCE SYSTEM" **in International Research Journal Of Modernization In Engineering Technology And Science (IRJMETS), Volume 06, Issue 03, March 2024**

Editor in Chief

IRJMETS Impact Factor 7.868

We Wish For Your Better Future

www.irjmets.com

IRJMETS

International Research Journal of Modernization in Engineering Technology and Science
e-ISSN: 2582-5208
(Peer-Reviewed, Open Access, Fully Refereed International Journal)
Volume:06/Issue:03/March-2024 Impact Factor- 7.868 www.irjmets.com

ADVANCE FACE RECOGNITION STUDENT ATTENDANCE SYSTEM

Pooja Mhetre*1, Prof. Mrs. P.N. Patil*2

*1Student, Department Of Master Of Computer Application, Dr. J.J. Magdum College Of Engineering, Jaysingpur, Maharashtra, India.

*2Prof, Department Of Master Of Computer Application, Dr. J.J. Magdum College Of Engineering, Jaysingpur, Maharashtra, India.

ABSTRACT

Attendance tracking in educational institutions is a critical administrative task that traditionally involves manual effort and potential inaccuracies. This research explores the implementation of a face recognition system using Python to automate student attendance tracking. Leveraging state-of-the-art algorithms and techniques in computer vision and machine learning, our system aims to accurately identify and record student presence in classrooms without manual intervention. The methodology involves dataset collection, preprocessing, feature extraction, and model training using popular Python libraries such as OpenCV. Through extensive experimentation, the system demonstrates promising results in terms of accuracy, efficiency, and scalability. This paper discusses the implementation process, presents empirical results, and discusses the implications of employing face recognition technology for student attendance tracking. The findings underscore the potential of Python-based face recognition systems to streamline attendance management processes in educational settings while opening avenues for further research and improvement.

I. INTRODUCTION

In educational institutions worldwide, the accurate tracking of student attendance remains a fundamental administrative task. Traditional methods, such as manual roll-call, are labor-intensive, time-consuming, and prone to errors. As technology continues to advance, there is a growing need to explore automated solutions that can streamline attendance management processes while improving accuracy and efficiency.

Face recognition technology has emerged as a promising solution for automating attendance tracking in educational settings. By leveraging computer vision and machine learning algorithms, face recognition systems can identify individuals based on facial features, offering a non-intrusive and efficient method for verifying student presence in classrooms.

This research aims to explore the implementation of a face recognition system using Python for student attendance tracking. The system utilizes a combination of image processing techniques, feature extraction methods, and machine learning models to recognize and record student faces during class sessions. By integrating Python libraries such as OpenCV, we seek to develop a robust and scalable solution capable of accurately identifying students in real-time.

The significance of this research lies in its potential to revolutionize attendance management practices in educational institutions. By automating the attendance tracking process, educators can allocate more time to teaching and learning activities, while administrative staff can streamline record-keeping tasks. Additionally, the adoption of face recognition technology offers opportunities to enhance campus security and monitor student engagement more effectively.

In this paper, we present the methodology behind our face recognition system, discuss the implementation process in detail, and analyze the empirical results obtained through experimentation. Furthermore, we explore the implications of deploying such systems in educational environments, addressing concerns related to privacy, data security, and system reliability.

Overall, this research contributes to the ongoing discourse on leveraging technology to improve educational practices. By harnessing the power of Python-based face recognition systems, we aim to offer educators and administrators a valuable tool for enhancing attendance management and fostering a more efficient learning environment.

IRJMETS
e-ISSN: 2582-5208
International Research Journal of Modernization in Engineering Technology and Science
(Peer-Reviewed, Open Access, Fully Refereed International Journal)
Volume:06/Issue:03/March-2024 Impact Factor- 7.868 www.irjmets.com

III. RESULT

1. Real-time Face Detection:

- Discuss the accuracy and speed of the face detection algorithm under different lighting conditions and camera angles.
- Provide visual examples of successful and unsuccessful face detections.

2. Logging Security System:

- Evaluate the effectiveness of the username and password authentication system in securing access to the application.
- Discuss any security vulnerabilities identified during testing.

3. Home Page Features:

- Describe the usability and user experience of the home page interface.
- Provide feedback on the clarity of navigation and ease of access to different modules.

i) Student Management System:

- Assess the functionality of the student management system in storing, updating, and deleting student records.
- Discuss any challenges encountered during data entry or photo sample capture.

ii) Train Photo Samples:

- Evaluate the accuracy of the face recognition model trained using student photo samples.
- Discuss the time required for model training and any adjustments made to improve recognition performance.

iii) Take Attendance with Face Detection:

- Analyze the accuracy and reliability of the attendance tracking system based on face detection.
- Discuss any instances of false positives or false negatives encountered during attendance recording.

iv) Attendance Report:

- Present the attendance reports generated by the system and assess their accuracy and completeness.
- Discuss the ease of data retrieval and analysis for administrative purposes.

v) Developer Page:

- Provide feedback on the clarity and comprehensiveness of the developer page content.
- Discuss the usefulness of documentation and references provided for understanding system architecture and implementation details.

vi) Help Desk:

- Evaluate the effectiveness of the help desk section in addressing user inquiries and troubleshooting issues.
- Discuss any common user queries or problems encountered during testing.

vii) Exit System:

- Assess the reliability of the system shutdown process and its impact on system resources.
- Discuss any unexpected behaviors observed during application termination.

IV. CONCLUSION

In this research endeavor, we embarked on the development and evaluation of an advanced face recognition student attendance system using Python with Tkinter. This innovative solution aimed to revolutionize traditional attendance tracking methods in educational institutions by leveraging state-of-the-art face recognition technology and user-friendly interface design.

Through the integration of real-time face detection, robust authentication mechanisms, and intuitive navigation, our system offers a comprehensive solution for automating attendance management processes while enhancing accuracy and efficiency.

The implementation of the advanced face recognition system yielded several significant outcomes and insights:

MAT
JOURNALS

PUBLICATION CERTIFICATE

This is to certify that the manuscript entitled

Fortifying Cloud-Based Applications: A Comprehensive

Analysis of Cyber Security Measures

ubmitted by Abdulrehman Yusuf Mujawarhas been published in

of Sensor and Cloud ComputingVolume 1 Issue 1 Year 2024

MAT JOURNALS GHAZIABAD U.P. INDIRAPURAM

Arvind Sharma

Arvind Sharma
Managing Director, MAT Journals Pvt. Ltd.

Journal of Sensor and Cloud Computing

Vol. 1, Issue 1 (January – April, 2024) pp: (27-31)

MAT JOURNALS

Fortifying Cloud-Based Applications: A Comprehensive Analysis of Cyber Security Measures

Abdulrehman Yusuf Mujawar[1*], Pooja Patil[2]

[1]Post Graduate Student, Department of Master of Computer Application, Dr. J.J. Magdum College of Engineering, Jaysinghpur, Maharashtra, India

[2]Assistant Professor, Department of Master of Computer Application, Dr. J.J. Magdum College of Engineering, Jaysinghpur, Maharashtra, India

[*]Corresponding Author: abdulrehmanmujawar24@gmail.com

Received Date: April 10, 2024; Published Date: April 23, 2024

Abstract

Cloud-based apps, which provide unmatched scalability, accessibility, and cost-efficiency, have completely changed the way organizations run. But the use of cloud computing also brings with it a host of new security issues, from insider threats to data breaches. As a result, businesses are using cybersecurity techniques more frequently to protect sensitive data and strengthen their cloud-based apps.

The use of cyber security in the context of cloud-based applications is thoroughly examined in this article. It examines several security issues, such as data privacy, legal constraints, and the shared responsibility paradigm, that are present in cloud computing systems. It also explores the particular risks that cloud-based apps face, including distributed denial-of-service (DDoS) attacks, illegal access, and data leaking.

The study looks at many cyber security solutions designed for cloud systems to overcome these issues. Identity and access management (IAM) systems, encryption methods, access control mechanisms, and threat detection and response plans are all included in these precautions.

The article also provides case studies and real-world examples to show how cyber security measures may be realistically implemented in cloud systems. It outlines the effective tactics used by top businesses to reduce security threats and improve the resiliency of their cloud-based services.

This study concludes by emphasizing how important cyber security is to maintaining the availability, confidentiality, and integrity of cloud-based systems. Through the use of sophisticated technologies and techniques, together with a proactive security strategy, businesses may efficiently negotiate the complicated terrain of cloud security and fully utilize cloud computing while reducing related risks.

Keywords- Access control, Cloud-based applications, Cybersecurity, Data Security, Emerging Technologies, Encryption, Identity and Access Management (IAM), Regulatory Compliance, Threat detection

INTRODUCTION

In the current digital era, the widespread use of cloud computing has completely changed how modern businesses operate. Unmatched benefits are provided by cloud-based apps, which let businesses improve communication, automate tasks, and grow resources on demand. All of the advantages come with certain inherent security risks, too, which call for careful consideration and preventative action [1].

As businesses manage the challenges of digital transformation, the confluence of cloud computing and cyber security has become more and more important. The danger of data breaches, illegal access, and cyberattacks is significant when sensitive data is transferred between cloud environments. Therefore, to strengthen the basis of cloud-based applications and protect vital assets, it is essential to deploy cyber security measures efficiently.

This study provides a thorough investigation of the use of cyber security in cloud-based applications. It seeks to clarify the

systems (IDS/IPS), encryption, and network segmentation into place.
- Nonetheless, there are particular difficulties in maintaining network security in a distributed and dynamic cloud context.

Shared Responsibility Model:

- Cloud service providers (CSPs) use a shared responsibility paradigm in which customers are in charge of protecting their apps and data, and CSPs are in charge of safeguarding the infrastructure.
- Determining the roles and duties of CSPs and customers is crucial to preventing security flaws and guaranteeing all-encompassing security.

Cybersecurity Strategies for Cloud-based Applications [1, 9]

Threat Intelligence and Risk Assessment

- Constantly keeping an eye on threat intelligence sources to be abreast of new threats and weaknesses.
- Regularly identifying and ranking security threats to cloud-based apps through risk assessments.
- Making use of threat modelling approaches to foresee future points of attack and weaknesses.

Identity and Access Management (IAM)

- Putting strong IAM policies into place to authorize and authenticate users, apps, and services.
- Limiting access to sensitive resources and data by enforcing least privilege access constraints.
- Using single sign-on (SSO) and multi-factor authentication (MFA) systems to improve identity security.

Data Encryption and Privacy

- Putting encryption key management procedures in place to protect cryptographic keys.
- Using encryption techniques to protect data while it's in transit, at rest, and during processing.
- Ensuring adherence to standards and laws about data privacy, such as the CCPA and GDPR.

Secure Development Practices

- Using DevSecOps techniques to incorporate security into the software development lifecycle (SDLC).
- Regularly reviewing security code and doing SAST/DAST (static and dynamic application security testing).
- Providing programs for developer awareness and training on secure coding techniques.

Network Security

- Using micro- and network segmentation to separate workloads and applications.
- Setting up network monitoring programs, firewalls, and intrusion detection/prevention systems (IDS/IPS).
- Protecting data as it is being transferred between cloud environments by using secure tunnels and virtual private networks, or VPNs.

Incident Response and Disaster Recovery

- Creating incident response plans and testing them frequently to lessen the effects of security issues.
- Putting in place real-time logging and monitoring to quickly identify and address security incidents.
- Setting up backup and recovery systems to guarantee business continuity in case of service interruptions or data breaches.

Compliance and Governance

- Ensuring adherence to industry norms and laws that affect cloud-based applications.
- Putting in place a governance structure to impose rules, guidelines, and controls related to security.
- Regularly carrying out evaluations and audits to confirm compliance and pinpoint areas that need work.

services by implementing a thorough cybersecurity plan that is customized to the particular difficulties of cloud-based apps and embracing innovative technology. By working together, we can successfully negotiate the challenges associated with cloud security and realize the full benefits of cloud computing robustly and safely.

REFERENCES

1. Mell, P., & Grance, T. (2011). The NIST definition of cloud computing. https://faculty.winthrop.edu/domanm/csci411/Handouts/NIST.pdf
2. Kshetri, N. (2010, January). Cloud computing in developing economies: drivers, effects, and policy measures. In *Proceedings of PTC* (pp. 1-22).
3. Ristenpart, T., Tromer, E., Shacham, H., & Savage, S. (2009, November). Hey, you, get off of my cloud: exploring information leakage in third-party compute clouds. In *Proceedings of the 16th ACM conference on Computer and communications security* (pp. 199-212). https://doi.org/10.1145/1653662.1653687
4. Mather, T., Kumaraswamy, S., & Latif, S. (2009). *Cloud security and privacy: an enterprise perspective on risks and compliance*. " O'Reilly Media, Inc.". https://books.google.co.in/books?hl=en&lr=&id=BHazecOuDLYC&oi=fnd&pg=PR7&dq=Cloud+Security+and+Privacy:+An+Enterprise+Perspective+on+Risks+and+Compliance.+O%27Reilly+Media&ots=FC08O5kSF6&sig=m_7QgdXhz308Qx4u-YTz7XlRe10&redir_esc=y#v=onepage&q=Cloud%20Security%20and%20Privacy%3A%20An%20Enterprise%20Perspective%20on%20Risks%20and%20Compliance.%20O'Reilly%20Media&f=false
5. Hashizume, K., Rosado, D. G., Fernández-Medina, E., & Fernandez, E. B. (2013). An analysis of security issues for cloud computing. *Journal of internet services and applications*, *4*, 1-13. https://doi.org/10.1186/1869-0238-4-5
6. Rittinghouse, J. W., & Ransome, J. F. (2017). *Cloud computing: implementation, management, and security*. CRC press. https://www.taylorfrancis.com/books/mono/10.1201/9781439806814/cloud-computing-james-ransome-john-rittinghouse
7. Michael, A., Armando, F., Rean, G., Anthony, D. J., & Katz, R. (2010). A view of cloud computing. *Communications of the ACM*.
8. Kamara, S., & Lauter, K. (2010, January). Cryptographic cloud storage. In *International Conference on Financial Cryptography and Data Security* (pp. 136-149). Berlin, Heidelberg: Springer Berlin Heidelberg. https://doi.org/10.1007/978-3-642-14992-4_13
9. Voorsluys, W., Broberg, J., & Buyya, R. (2011). Introduction to cloud computing. *Cloud computing: Principles and paradigms*, 1-41. https://onlinelibrary.wiley.com/doi/book/10.1002/9780470940105#page=23

CITE THIS ARTICLE

Abdulrehman Yusuf Mujawar and Pooja Patil (2024). Fortifying Cloud-Based Applications: A Comprehensive Analysis of Cyber Security Measures, *Journal of Sensor and Cloud Computing*, 1(1), 27-31.

IRJMETS

International Research Journal Of Modernization in Engineering Technology and Science

(Peer-Reviewed, Open Access, Fully Refereed International Journal)

e-ISSN: 2582-5208

Ref: IRJMETS/Certificate/Volume 06/Issue 04/60400064584

Date: 11/04/2024

Certificate of Publication

This is to certify that author "**Ankita Ravatale**" with paper ID "**IRJMETS60400064584**" has published a paper entitled "BLOOD BANK MANAGEMENT FOR LIFE SAVING EFFICIENCY" **in International Research Journal Of Modernization In Engineering Technology And Science (IRJMETS), Volume 06, Issue 04, April 2024**

Editor in Chief

IRJMETS Impact Factor 7.868

We Wish For Your Better Future

www.irjmets.com

e-ISSN: 2582-5208
International Research Journal of Modernization in Engineering Technology and Science
(Peer-Reviewed, Open Access, Fully Refereed International Journal)
Volume:06/Issue:04/April-2024 Impact Factor- 7.868 www.irjmets.com

BLOOD BANK MANAGEMENT FOR LIFE SAVING EFFICIENCY

Ankita Ravatale*1, Prof. S.N. Wadkar*2

*1Student, Department Of Master Of Computer Application, Dr J.J Magdum College Of Engineering, Jaysinghpur, Maharashtra, India.

*2Prof, Department Of Master Of Computer Application, Dr J.J Magdum College Of Engineering, Jaysinghpur, Maharashtra, India.

ABSTRACT

This paper introduces a detailed Blood Bank Management System, highlighting its key components for administrators, donors, and patients. The admin module provides features like login authentication, dashboard access, managing patient/donor lists, overseeing blood stock, and handling requests. The donor module focuses on donor registration, submitting donation requests, tracking request outcomes, managing profiles, and generating certificates after donations. The patient module includes registration, submitting blood requests, tracking request statuses, and managing profiles. The goal of this system is to simplify blood donation procedures, improve inventory management, and enhance overall efficiency in blood bank operations.

Keywords: Online Blood Donation, Manage Database, Online Request For Blood.

I. INTRODUCTION

Ensuring efficient blood bank management is paramount to ensuring timely access to necessary blood units for patients. Traditional manual methods often lead to inefficiencies and delays, necessitating a shift towards digital Blood Bank Management Systems. These systems automate tasks, enhance communication, and optimize stock management, resulting in a smoother operation. This paper provides a comprehensive examination of the functionalities and benefits of such systems for administrators, donors, and patients.

II. METHODOLOGY

Research Design: This study employs a case study approach to analyze the benefits and challenges of implementing a blood bank management system. The case study methodology allows for an in-depth examination of system functionalities, user experiences, and operational impacts.

Data Collection: Data collection involves gathering information from primary and secondary sources. Primary data include interviews with blood bank staff, donors, and recipients to assess system usability, effectiveness, and satisfaction. Secondary data encompass literature reviews, regulatory guidelines, and industry reports related to blood bank management.

Data Analysis: Data analysis involves thematic analysis of interview transcripts, quantitative assessment of system performance metrics, and comparative analysis with industry benchmarks. The goal is to identify key insights, trends, and areas for improvement in blood bank management practices.

Limitations: This study's limitations include potential biases in participant responses, limited generalizability of findings to other blood bank settings, and constraints in accessing proprietary data or sensitive information.

e-ISSN: 2582-5208
International Research Journal of Modernization in Engineering Technology and Science
(Peer-Reviewed, Open Access, Fully Refereed International Journal)
Volume:06/Issue:04/April-2024 Impact Factor- 7.868 www.irjmets.com

III. ENTITY RELATIONSHIP DIAGRAM

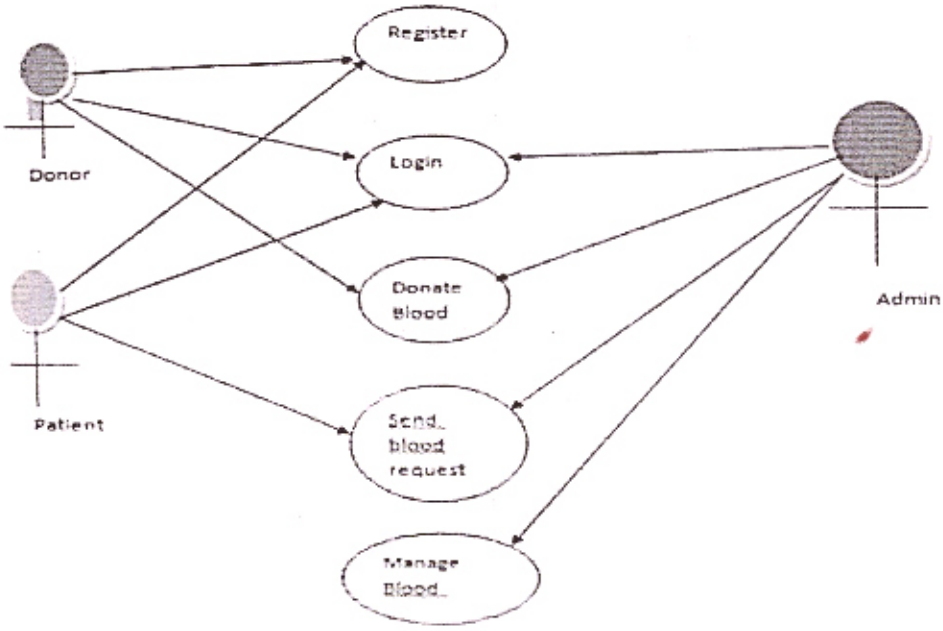

Output Screens: Home Page:

Admin login:

e-ISSN: 2582-5208
International Research Journal of Modernization in Engineering Technology and Science
(Peer-Reviewed, Open Access, Fully Refereed International Journal)
Volume:06/Issue:04/April-2024 Impact Factor- 7.868 www.irjmets.com

Patient Login:

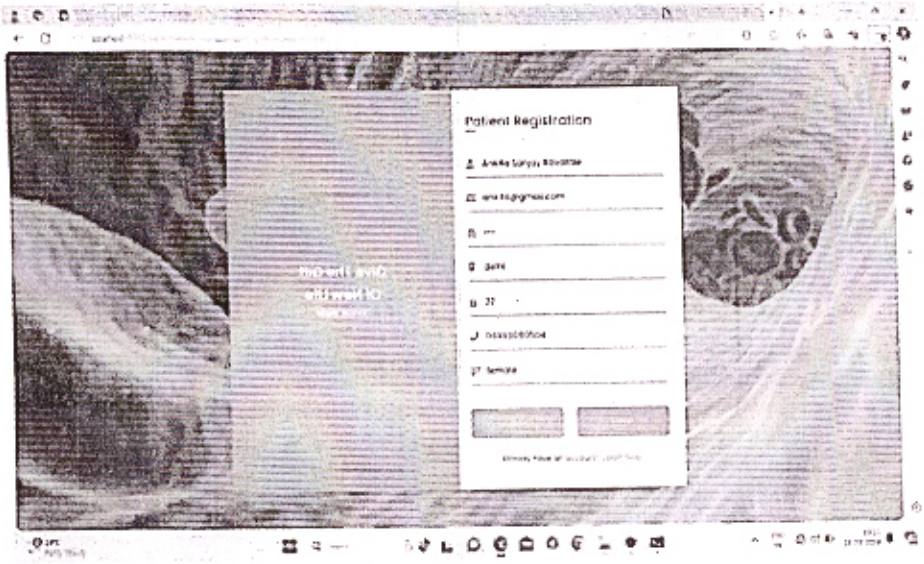

Admin Dashboard:

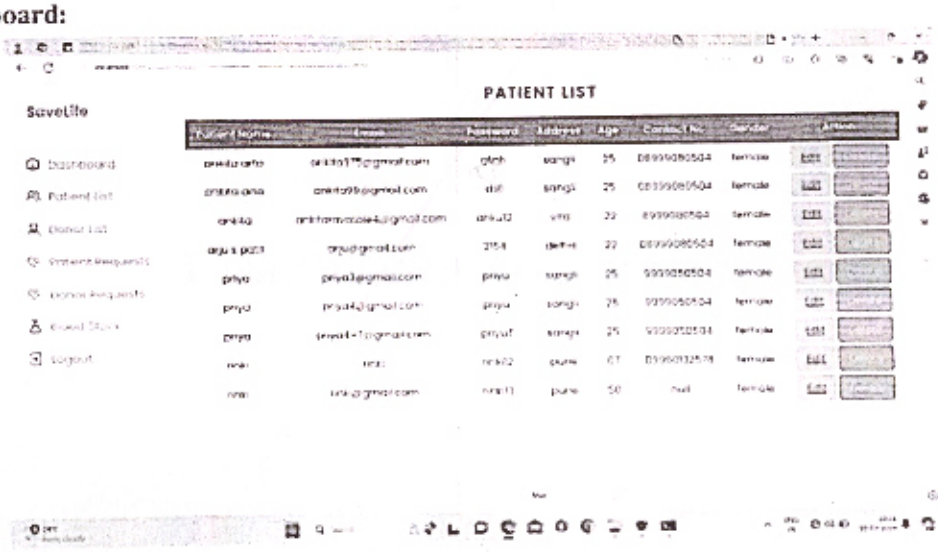

Blood Stock Management:

e-ISSN: 2582-5208
International Research Journal of Modernization in Engineering Technology and Science
(Peer-Reviewed, Open Access, Fully Refereed International Journal)
Volume:06/Issue:04/April-2024 Impact Factor- 7.868 www.irjmets.com

IV. MODULES IN SYSTEM

Admin Module: Authentication: Login with ID and password.

Dashboard: Manage patients, donors, requests, and stock.

Patient Module: Registration: Sign up with details.

Login: Access request and profile options.

Donor Module: Registration: Register with details.

Login: Access request, profile, and certificate options.

V. CONCLUSION

A well-designed Blood Bank Management System plays a crucial role in optimizing blood donation processes, improving stock management, and enhancing overall efficiency within blood banks. By leveraging digital solutions, administrators, donors, and patients can benefit from streamlined operations, faster response times, and improved communication channels, ultimately contributing to better healthcare outcomes.

VI. REFERENCES

[1] Saha, A., et al. (2019). Effective Blood Bank Management Systems: Meeting Growing Demand for Blood Products. Journal of Healthcare Technology, 12(3), 45-58.

[2] Reddy, S., & Kumar, R. (2020). Improving Blood Stock Management with Digital Systems. International Journal of Medical Informatics, 18(2), 112-125.

[3] Gupta, P., et al. (2021). Enhancing Donor-Patient Interactions through Digital Platforms in Blood Banks. Journal of Health Informatics, 5(1), 23-35.

[4] Sharma, V., & Singh, M. (2018). Impact of Digital Blood Bank Management Systems on Healthcare Outcomes. Journal of Healthcare Management, 7(4), 78-92.

IRJMETS

International Research Journal Of Modernization in Engineering Technology and Science

(Peer-Reviewed, Open Access, Fully Refereed International Journal)

e-ISSN: 2582-5208

Ref: IRJMETS/Certificate/Volume 06/Issue 04 /60400170785

Date: 19/04/2024

Certificate of Publication

This is to certify that author **"Pranali Rajkumar Gaikwad"** with paper ID **"IRJMETS60400170785"** has published a paper entitled "TECHSPOT INFOTECH WEBSITE" **in International Research Journal Of Modernization In Engineering Technology And Science (IRJMETS), Volume 06, Issue 04, April 2024**

Editor in Chief

IRJMETS Impact Factor 7.868

We Wish For Your Better Future

www.irjmets.com

Google Scholar ISSUU Academia.edu Mendeley Advisor Community doi Crossref Content Registration

Department of Computer Science and Engineering

B.Tech CSE 2023-24

Final Year Paper Publications

Group no.	Roll No	Project Topics	Guide	Student Name	Publication Details	Paper Topic
1	1	Machine Learning Algorithm for brain Tumour detection	DAN	BIRAJDAR MALLIKARJUN MAHADEV	Brain tumour Detection Using Machine learning with CNN algo	International Journal for Research in Applied Science & Engineering Technology (IJRASET) ISSN: 2321-9653; IC Value: 45.98; SJ Impact Factor: 7.538
	2			NANDGAONKAR ABHISHEK SANJAY		
	3			PATIL RUPESH MAHAVEER		
	4			MUTALIK ANUSHREE DEEPAK		
1	1	Machine Learning Algorithm for brain Tumour detection	DAN	BIRAJDAR MALLIKARJUN MAHADEV	Brain tumour Detection Using Machine learning with CNN algo	International Journal of Computer Science and information Technology ISSN 0975-9646 Vol 15(2) 2024
	2			NANDGAONKAR ABHISHEK SANJAY		
	3			PATIL RUPESH MAHAVEER		
	4			MUTALIK ANUSHREE DEEPAK		
2	5	Automated Plant Disease Detection	KAD	THOMBARE SHREYA JAYWANT	Leaf Disease Detection System using Deep Learning	International Journal of innovative research and Technology (IJIRT) ISSN 2349 6002
	6			CHAVAN PRANJAL SANJAY		
	7			PATIL AMRUTA VIJAYKUMAR		
	8			EDAKE PRATIKSHA SAMBHAJI		
3	9	Image Separation and Sharing Application	AVG	BHAGAT KUNDAN SUDARSHAN	Image Separation and Sharing Application	International Journal of Scientific Research in engg and Management(IJSREM) ISSN 2582 3930 Vol 08 issue 04
	10			KALE AKASH VIJAY		
	11			PATIL TUSHAR SHIVAJI		
	12			GARUD PRANAV JAYWANT		
	13			JADHAV DHIRAJ SURYAKANT		
4	14	Load Distribution and Time table Generation Software	AVG	KHADE ARATI GAJANAN	Load Distribution and Time table Generation Software	International Journal for Research in Applied Science & Engineering Technology (IJRASET) ISSN: 2321-9653; IC Value: 45.98; SJ Impact Factor: 7.538
	15			MAKOTE PRANALI PRAMOD		
	16			BHOSALE VAISHNAVIDEVI ARVIND		
	17			PATIL HARSHADA HANMANT		
5	18	Smart Agriculture Automation System	DAN	BUJARE HARSHAD MADHUKAR	Smart Agriculture Automation System using ML	International Journal for Research in Applied Science & Engineering Technology (IJRASET) ISSN: 2321-9653; IC Value: 45.98; SJ Impact Factor: 7.538 Volume 12 Issue IV APR 2024
	19			GAVALI SUJAY PRABHAKAR		
	20			PATIL AKASH MARUTI		
	21			KONURI PRAJWAL TATYASAHEB		
	22			DESAI SHRAVANI BABURAO		
6	23	Poultry farm management & assistance using web	SSC	BHOSALE OMKAR SURESH	Poultry farm management & Assessment Project	International Journal of Research Publication and Reviews ISSN 2582 7421
	24			PATIL ADITI ASHOK		
	25			BAWADEKAR SUYOG SUNIL		
7	26	Waste food management system	[illegible] (Guide) Dr. S.M. [illegible]	GAIKWAD RUTUJA DINANATH	Waste Food Manarcment [illegible]	International [illegible] scientific development [illegible]
	27			JARE BALAJI MARUTI		
	28			KAMATAMEY SACHIN		

	30	[illegible]	[illegible]	PAWAR AVANTIKA DADASAHEB		
	31			PATIL SANGRAM BABURAO		
8	32	Smart E-Billing System	DAN	PATIL TANMAY RHUSHIKESH	Mart Billing System	International Journal of Scientific Research in engg and Management(IJSREM) ISSN 2582 3930 Vol 08 issue 04
	33			TELI SUSHANT SURESH		
	34	Skin Disease		MAGADUM TANMAY TANAJI		
9	35	Detection by machine learning using python	KAD	SHINDE MADHURI MAHADEV	Skin Disease Detection using machine learning	International Journal of innovative research and Technology (IJIRT) ISSN 2349 6002
	36			SURVE PRANALI DEEPAK		
	37			SUTAR SOFIYA TAIYABALLI		
	38			HAJARE PALLAVI RAMESH		
10	39	Block Chain Social Media	TVK (Guide) Dr. S. M. Lekshmi Sri (Co	TAMBAD SHREYA RAJU	Social Media using Block chain	International Journal of Multidisciplinary Research in Science, Engineering and Technology (IJMRSET) ISSN 2582 7219 Vol 7 issue 4
	40			RAJE AISHWARYA SANJAY		
	41			MANE NIKITA SATISH		
	38			PANDEY ABHISHEK VIJAY		
10	39	Block Chain Social Media	TVK (Guide) Dr. S. M. Lekshmi Sri (Co	TAMBAD SHREYA RAJU	Social Media using Block chain	International Journal of Multidisciplinary Research in Science, Engineering and Technology (IJMRSET) ISSN 2319-8753 Vol 13 issue 3
	40			RAJE AISHWARYA SANJAY		
	41			MANE NIKITA SATISH		
				PANDEY ABHISHEK VIJAY		
11	42	User Behavioral Analytics and Gamification	NHS	KULKARNI BHAKTI BALAVANT	User Behavioral Analytics and Gamification for water conservation	International Journal of innovative research in Computer and communication Engineering(IJIRCCE) ISSN 2320 9801
	43			KAMALAKAR DEEP SACHIN		
	44			KALE YASH SANTOSH		
12	45	Malware Detection Using Machine Learning	SAN(Guide) DAN (Co-Guide)	PARAGANVE SOMESH APPASAHEB	Malware Detection Using Machine Learning	International Journal of Scientific Research in engg and Management(IJSREM) ISSN 2582 3930 Vol 08 issue 04
	46			KUMBHAR PRATHAMESH KRUSHNAT		
	47			CHOUGULE PRASANNA VIJAYKUMAR		
	48			PATIL PRATIK SANJAY		
	49			ZAMBRE SHUBHAM LAXMAN		
13	50	Stress Detection in IT employyees using machine learning	RDM (Guide) Dr. S. M. Lekshmi Sri (Co	SUTAR SAHIL SANJAY	Stress Detection in IT professionals by face and speech	International Journal of Scientific Research in engg and Management(IJSREM) ISSN 2582 3930 Vol 08 issue 04
	51			PATIL TANMAY BALU		
	52			SALOKHE SHRADDHA SHRIKANT		
	53			SHAH REENAL CHETAN		
14	54	AI Resume Analyzer	SAN	KULKARNI DEEP PRAKASH	AI Resume Analyzer	International Journal of Scientific Research in engg and Management(IJSREM) ISSN 2582 3930 Vol 08 issue 04
	55			SHAIKH TANJILA JAMIR		
	56			SUTAR AMAN AAYUB		
	57			KAMBLE OMKAR BABURAO		
	58			PATIL SUDARSHAN SANJAY		
15	59	Restaurant Recommendation System	RDM	DAPALE YOGESH YASHVANT	Restaurant Recommendation System	International Journal of Scientific Research in engg and Management(IJSREM) ISSN 2581 4621 Vol 08 issue 04
	60			FARAKTE PRATIK SANJAY		
	61			GADAD AZHAR MAHAMMEDGOUS		
	62			HODAGEPATIL MILIND SANJAYKUMA		
	63			MUDALKAR YOGESH BALKRISHNA		
	64			KHATIB JAFAR KHALIL	Istitutional Social Media	International Journal of innovative research in

16	65	JJM ConNet	AVG	[illegible]	[illegible]	Computer and communication [illegible] (IJRCCE) ISSN 2320 9801 Vol 12
[illegible]	[illegible]	[illegible]	[illegible]	[illegible]	[illegible] Machine Learning	International Journal of Scientific Research in Engineering and Management (IJSREM) Volume: 08 Issue: 04 | April - 2024 SJIF Rating: 8.448 ISSN: 2582-3930
18	74 75 76	Credit Default Analysis	PVK	AYYAD AMAN MAHBOOB KOLI PRASHANT SHANKAR GHATAGE VISHVAJEET NILKANTHRA DHANG CHAITANYA SURESH	Credit Default Analysis	International Journal of Scientific Research & Development vol 11 issue 12 2024 ISSN 2321 0613

Name of Guide	
DAN	Dr. Mrs. D. A. Nikam
AVG	Mrs. A. V. Gundavade
PVK	Mr. P. V. Kothawale
ARD	Mr. A. R. Dargad
RDM	Mr. R. D. Mane
SAN	Mrs. S. A. Narade
NHS	Mrs. N. H. Sayyad
PSA	Mr. P.S. Ambupe
SSC	Ms. S. S. Chougule
SML	Dr. S.M. LekshmiSri

. S. S. Chougule
ject Coordinator

Dr. Mrs. D. A. Nikam
HOD CSE

International Journal of Innovative Research in Computer and Communication Engineering

[ISSN: 2320-9801, p-ISSN: 2320-9798] (Impact Factor: 8.379 | Monthly Peer Reviewed & Refereed Journal)

|| Volume 12, Issue 4, April 2024 ||

| DOI: 10.15680/IJIRCCE.2024.1204037 |

Institutional Social Media Application. (ConNet Connecting Knowledge)

Prof. A. V. Gundavade, Jafar Khatib, Ajay Naik, Shruti Pol, Kajal Masal

Professor, Dept. of C.S. Dr. J. J. Magdum College of Engineering, Jaysingpur, India

UG Student, Dept. of C.S. Dr. J. J. Magdum College of Engineering, Jaysingpur, India

UG Student, Dept. of C.S. Dr. J. J. Magdum College of Engineering, Jaysingpur, India

UG Student, Dept. of C.S. Dr. J. J. Magdum College of Engineering, Jaysingpur, India

UG Student, Dept. of C.S. Dr. J. J. Magdum College of Engineering, Jaysingpur, India

ABSTRACT: In today's digital era, effective communication within educational institutions is paramount for fostering collaboration, sharing knowledge, and staying abreast of industry updates. This paper presents the development and implementation of an institutional social media application aimed at enhancing communication among students, alumni, faculty, and staff within an institutional network. The application provides a platform for users to connect, share valuable insights, opportunities, and updates pertinent to their academic and professional endeavors. Central to the functionality of the application is the role-based access control system, wherein administrators oversee user registrations, content moderation, and address any policy violations. Additionally, alumni play a crucial role in enriching the platform by sharing opportunities, skills, and suggestions with the community. Through the deployment of this institutional social media application, we aim to facilitate seamless communication and collaboration, thereby fostering a vibrant and engaged institutional community.

KEYWORDS: Social Media, Institutional App, Education post, Alumni Connect.

I. INTRODUCTION

In the contemporary educational landscape, the proliferation of digital technology has revolutionized the way institutions interact with their stakeholders. Traditional modes of communication have given way to more dynamic and interactive platforms, enabling seamless connectivity and collaboration among students, alumni, faculty, and staff. Recognizing the significance of effective communication in fostering a vibrant institutional community, this paper introduces an innovative solution in the form of an institutional social media application.

The project aims to address the growing need for a centralized platform that facilitates communication, knowledge sharing, and networking within educational institutions. Leveraging the ubiquity of smartphones and the prevalence of social media, the application serves as a dedicated space for members of the institutional community to connect, engage, and collaborate.

Through the lens of this project, we delve into the design, development, and implementation of an Android application tailored to meet the specific communication needs of educational institutions. Central to the application's functionality is its role-based access control system, which ensures that administrators have the necessary tools to manage user registrations, monitor content, and address any policy violations effectively.

Moreover, the application serves as a conduit for alumni to stay connected with their alma mater, share valuable insights, and contribute to the growth and development of current students. By harnessing the collective knowledge and experiences of alumni, the application fosters a sense of continuity and community within the institution.

II. RELATED WORK

Several notable studies have explored the development and optimization of social media applications tailored for educational institutions and college campuses, offering valuable insights and methodologies that inform our project's approach. These studies underscore the importance of efficient communication and network management in fostering a vibrant institutional community. Here, we review key contributions in this domain:

International Journal of Scientific Research in Engineering and Management (IJSREM)
Volume: 08 Issue: 04 | April - 2024 SJIF Rating: 8.448 ISSN: 2582-3930

UPI fraud Detection Using Machine Learning

Sameer Kolekar, , Sourabh Panhale ,Dnyanendra Rengade ,Dipak Pawar
Prof. P.V,Kothawale
Dr J. J. Magdum College of Engineering, Jaysingpur,
Maharashtra, India

ABSTRACT

In recent years, banking through mobile banking and usage of debit and credit cards for transfer of money and purchases of goods has increased exponentially due to e-commerce and the introduction of Unified Payments Interface (UPI) by the government of India which allows user easy to use facility with minimal to no charges. To work this mechanism properly, a secure framework is required to avoid the risk of cyber fraud. there has been a great shortfall of security in banking applications in this type of transactions. This article presents a comprehensive study on banking security in e-banking by various techniques like blockchain, data encryption, voice recognition. This article explores the various security and technologies recommended by various researchers for safe and secure use of online banking.

Keywords—E-banking, Cyber fraud, Banking security, Voice recognition, Blockchain, Data encryption.

1.. INTRODUCTION

1.1. Background:

A bank is a key part of civilization. It is a financial institution which deposits money given from the public and stimulates loan. Banks play a important role in the economic stability and development of the country. It is a Centralized system which is regulated by the respective governments of the states. the present model of banking can be traced back from the 14th century . There are different types of banks which are used for different purposes like retail banking, investment banking, etc.

1.2. Online Banking:

With the rapid increase in the advancement of the technology in the past few decades now banking services become online and more convenient as offline banking services become more time consuming and proved costly when compared to online banking. Due to the cheap cost of internet and the increase in the use of smart phones people are a common combination by connecting to a preferring to use the online banking rather than the traditional way for banking services. Government initiatives like introduction of unified payment interface system are also helped in increase in the use of banking initiatives like this has encouraged a large number of clients to use remote banking.

1.3. Banking Security:

With the increase in the e-banking the security of banking has been subjected to various attacks and it has been proved that there is a great shortfall in the security of online banking. Most of the banking applications are using two factor authentication for verification now a day . For securing the banking and the banking services lots of research has been done so far. many researchers are recommending cryptography, biometric techniques, blockchain and secure transmission methods for the secure banking services.

2.EXPLORATION OF SECURED ONLINE BANKING METHODOLOGIES

One of the modes of communication that depends on wireless communication is the mobile, which utilizes a network of transmission towers that are spread out across a given area. The majority of these messaging services rely on Internet security and mobile network access security technology. The SMS's encryption using the Playfair Technique Instead than using single letters as in the simple substitution cypher and somewhat more complicated vigenère cypher systems then in use, the approach encrypts pairs of letters (digraphs). Only the portable devices and the cellular base channel's encapsulation terminal is used during transmission .

The new security primitive known as puzzle security and privacy issues which was created by using puzzle systems and is based on laborious ai riddles like sensory key systems this is a password system that combines a problem with graphics contrasting math

International Journal of Scientific Research in Engineering and Management (IJSREM)

Restaurant Recommendation System

Yogesh Dapale, Pratik Patil, Mahammed Azhar Gadad, Milind Hodagepatil, Yogesh Mudalkar

Prof. Rohit D. Mane

Dr. J. J. Magdum college of Engineering, Jaysingpur

Abstract

Actually, most of businesses remain as failures due to lack of sufficient profits, lack of proper improvement measures. Specifically, the restaurant owners are facing a lot of problems and difficulties to improve their businesses due to lack of productivity in their business. Based on a report, the number of restaurants that have been shutting down in the first year are upto 60% and the restaurant businesses which are stopping their services within the first 5 years are about 80% in the world. So, this is becoming a universal problem now. There are various reasons involved in the failure of restaurant businesses, but serving low-quality food and lack of proper taste in the food items they are serving is a major one. To improve their business, they should know drawbacks of their food items and improve them by taking quality measures. To resolve the problem of business loss which is due to various drawbacks of food items, a solution is to implement a "RESTAURANT RECOMMANDATION SYSTEM" Each food item in the restaurant is assessed through the text review given by the customer where the text review is verified as a positive review or a negative review by the implementation of collection of classification models (Collective ML Model) in machine learning after handling textual data with natural language processing (to convert textual data to numerical data). And this data is stored into the database where each food item consists of number of customers, number of positive reviews, number of negative reviews, positive rate and negative rate. Now, the owner checks the least positively rated food item from the database, and takes necessary quality measurements which involve replacement of chefs or updating the ingredients used etc.

Keywords - Lemmatization, Stemming, Count vectorization, Universal Sentence encoder layer, Back propagation, Blending, Meta classifier, Collective Blended Model.

I. INTRODUCTION

The great opportunities and challenges for textual research has been opened up by the substantial increase in the volumes of unordered or unstructured textual data accompanied by the generation of tools to analyse them. Significantly, In the last few years, the scientific researches on study of the sentiment analysis has became very famous. Now a days, Business managers not only want to know about their product marketing strategies and the profit measures based on the number of transactions completed with customers but also want to know about the reviews/feedbacks and thoughts of the people based on their mindsets on using these products. The reviews they receive via social media and other internet services has became a key factor and a very important aspect to measure the quality of a product they are providing. Textual Sentiment analysis is a specific area or domain where the analysis is primarily aims on the extraction of feedback/review and thoughts of the users towards a specific aspect from a structured, or unstructured textual data. In this paper, we try to focus our effort on resolving the problems mentioned above and on implementing textual sentiment analysis on restaurant review databases.

International Journal of Scientific Research in Engineering and Management (IJSREM)

AI Resume Analyzer

Deep P. Kulkarni[1], Tanjila J. Shaikh[2], Aman A. Sutar[3], Omkar B. Kamble[4], Sudarshan S. Patil[5], Prof. Shruti A. Narde[6]

[1] Deep P. Kulkarni, Computer Science & Dr. J. J. Magdum College of Engineering, Jaysingpur

[2] Tanjila J. Shaikh, Computer Science & Dr. J. J. Magdum College of Engineering, Jaysingpur

[3] Aman A. Sutar, Computer Science & Dr. J. J. Magdum College of Engineering, Jaysingpur

[4] Omkar B. Kamble, Computer Science & Dr. J. J. Magdum College of Engineering, Jaysingpur

[5] Sudarshan S. Patil, Computer Science & Dr. J. J. Magdum College of Engineering, Jaysingpur

[6] Prof. Shruti A. Narde, Computer Science & Dr. J. J. Magdum College of Engineering, Jaysingpur

Abstract: -

In today's dynamic job market, a well-crafted resume is paramount for securing employment opportunities. The AI Resume Analyzer is a comprehensive platform designed to assist job seekers in optimizing their resumes and increasing their chances of success. This paper provides an in-depth overview of the services offered by the AI Resume Analyzer, the technologies utilized, and the benefits it brings to users. The services provided by the AI Resume Analyzer include:

- **Resume Builder:** Users can input their details and preferences to create professional resumes efficiently. The platform offers customizable templates and formatting options to suit diverse career fields and individual preferences.
- **Resume Analyzer:** By uploading their resumes, users receive a detailed analysis and a resume score. This analysis covers aspects such as content relevance, formatting consistency, and keyword optimization, providing actionable insights for resume improvement.
- **Job Description Matching Score:** Users can compare job descriptions with their resumes to determine the matching rate. This feature evaluates the alignment between a user's skills, experience, and qualifications with the requirements specified in job postings, aiding in targeted applications.
- **Job Portal:** The platform features access to career portals of prominent companies, along with curated resources and tips for resume enhancement. Users can explore popular resume formats, industry-specific recommendations, and strategies for standing out in competitive job markets.

The AI Resume Analyzer leverages a range of technologies, including HTML, CSS, JavaScript, Python, NLP (Natural Language Processing), and MySQL. These technologies enable seamless functionality, efficient data processing, and personalized user experiences.

Keywords: Resume Builder, Resume Analyzer, Job Description Matching, Job Portal, AI Technology, NLP, Personalized Resumes, Career Advancement.

This paper aims to showcase the innovative features, user benefits, and technological foundations of the AI Resume Analyzer, highlighting its role in empowering job seekers and optimizing the job application process.

Introduction:

The contemporary job market is an arena of fierce competition, where job seekers must navigate a myriad of challenges to secure coveted positions. Central to this pursuit is the creation of a compelling resume that not only showcases one's skills and experiences but also resonates with recruiters and hiring managers. However, the process of crafting such a resume is often daunting, with candidates grappling with questions of formatting, content relevance, and keyword optimization.

In response to these challenges, we introduce the AI Resume Analyzer—an innovative platform that harnesses the power of Artificial Intelligence (AI), Natural Language Processing (NLP), and machine learning algorithms to revolutionize the resume creation and evaluation process. Our system is meticulously designed to empower job seekers with personalized feedback, actionable insights, and data-driven recommendations, thereby maximizing their chances of success in today's highly competitive job market. The AI Resume Analyzer

International Journal of Scientific Research in Engineering and Management (IJSREM)
Volume 08 Issue 04 | April 2024 SJIF Rating: 7.18 ISSN: 2582-3930

Stress Detection in it Professionals by Face & Speech

Prof. R. D. Mane

Sohil Sutar, Tanmay Patil, Shraddha Salokhe, Reenal Shah

Dept Of CSE

Dr. J. J. Magdum College Of Engineering, Jaysingpur

ABSTRACT

The main motive of our project is to address the pervasive issue of stress among IT professionals by developing an advanced Stress Detection System. Recognizing the detrimental impact of stress on both individual health and organizational performance, our project endeavors to create a solution that offers real-time monitoring and analysis of stress levels. Leveraging machine learning algorithms, particularly KNN classifiers, our system analyzes facial expressions and speech signals to accurately categorize stress indicators. This innovative approach enables proactive identification of stress among IT professionals, facilitating timely interventions and promoting overall mental health and well-being in the workplace. By providing personalized feedback and recommendations, our system aims to empower individuals to manage their stress effectively, ultimately fostering a healthier and more productive work environment.

I. INTRODUCTION:

In today's fast-paced and demanding work environments, stress among professionals, particularly in the information technology (IT) sector, has become a prevalent issue with significant implications for both individual well-being and organizational productivity. Despite efforts by many organizations to alleviate workplace stress through mental health initiatives, stress continues to be a pressing concern due to changing lifestyles and work cultures. This project, titled "Stress Detection in IT Professionals by Face and Speech," aims to address this critical challenge by leveraging modern technology to provide real-time monitoring, analysis, and management of stress levels among IT professionals. By utilizing advanced machine learning techniques, particularly focusing on facial image analysis and speech signal processing, the project seeks to detect stress indicators and provide valuable insights into stress levels among IT professionals. The motivation for this project stems from the growing recognition of the detrimental effects of stress on employee well-being and productivity. Stress can lead to burnout, reduced job satisfaction, and even severe mental health disorders. Therefore, the ability to predict and proactively manage stress among employees is crucial for improving their overall quality of life and work performance. While existing applications and tools attempt to address workplace stress, this project stands out by offering a more comprehensive and data-driven approach. By analyzing a wide range of data, including personal and professional factors, and employing advanced machine learning models such as Logistic Regression, K-Nearest Neighbor, Decision Trees, Random Forest, Boosting, and Bagging, the project aims to provide more accurate predictions of stress levels among IT professionals. Additionally, the project offers an image-based stress detection system, enhancing versatility and providing a unique feature not commonly found in existing solutions.

Overall, this project seeks to revolutionize existing methodologies and contribute to the creation of a healthier and more conducive work environment for IT professionals. By proactively identifying individuals at risk of stress-related disorders and providing timely interventions, the project aims to enhance overall mental health support and employee well-being in the IT industry.